INSTALLATION MANUAL

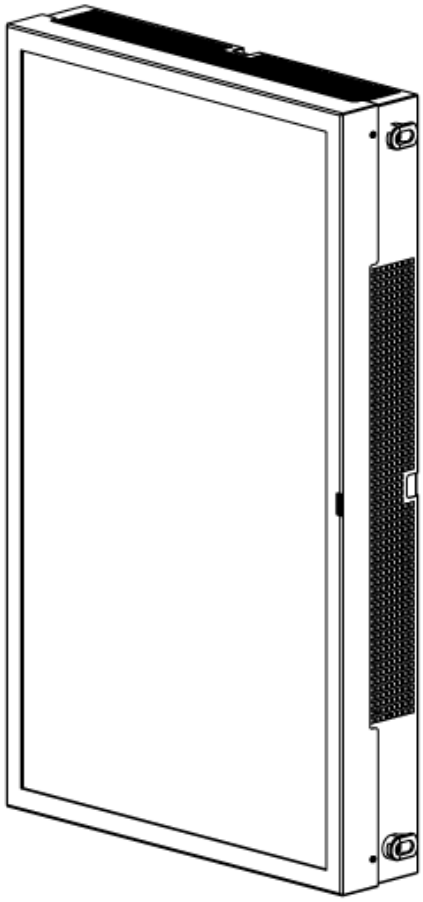

Outdoor Wall Casing

Designed by HI-ND

Art No: OW4616-1101
OW5516-1101

⚠ WARNING

HI-ND AB (the “Seller”) is only to be liable for defects provided proper use, service, installation and mounting of the product. The buyer shall be fully liable for and have the sole responsibility to

- at all times use the product in accordance with this installation manual as well as any other instructions and productions specifications (including but not limited to as regards maximum load and capabilities)
- select the correct mounting material
- evaluate and assess the condition of the applicable wall, ceiling and load bearing capacity of such and
- undertake all other actions and assessments that may be deemed necessary, relevant or beneficial in connection with the use, installation and mounting of the product.

Hi-Nd shall not be liable for any damage caused by the product after it has been delivered and whilst it is in the possession of the buyer, e.g. defects due to faulty maintenance, incorrect installation or faulty repair by the Buyer or to alterations carried out without the Supplier’s consent in writing. Nor shall Hi-Nd be liable for any damage to products of which the product(s) form a part.

The Buyer acknowledge that it has not relied on any statement, promise or representation made or given by Hi-Nd which is not set out this manual and is fully aware of its responsibilities set out herein.

HI-ND

LIST OF PARTS

M8x20

4 x

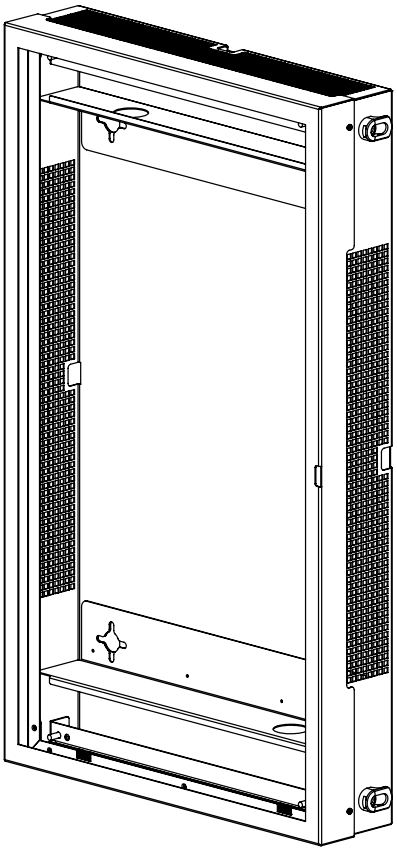

NUMBER OF PERSONS REQUIRED

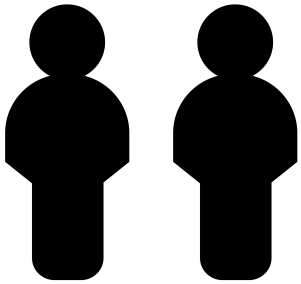

HI-ND

ASSEMBLY INSTRUCTIONS

1

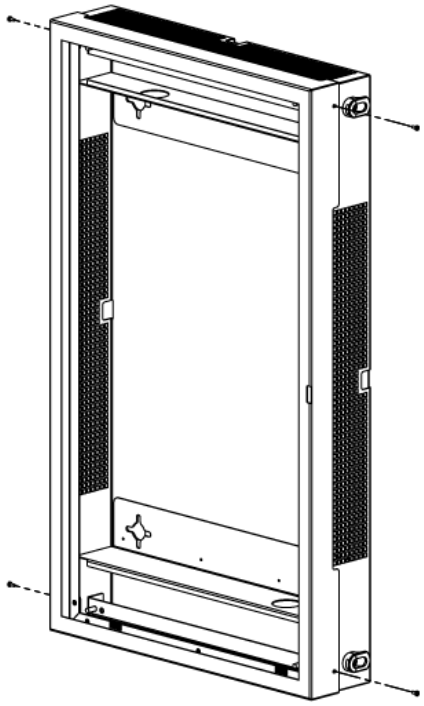

Remove screws

2

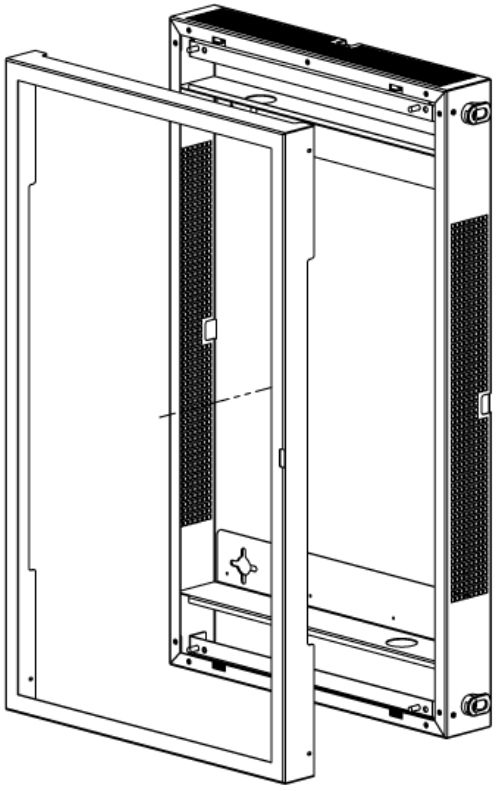

Remove front cover

HI-ND

3

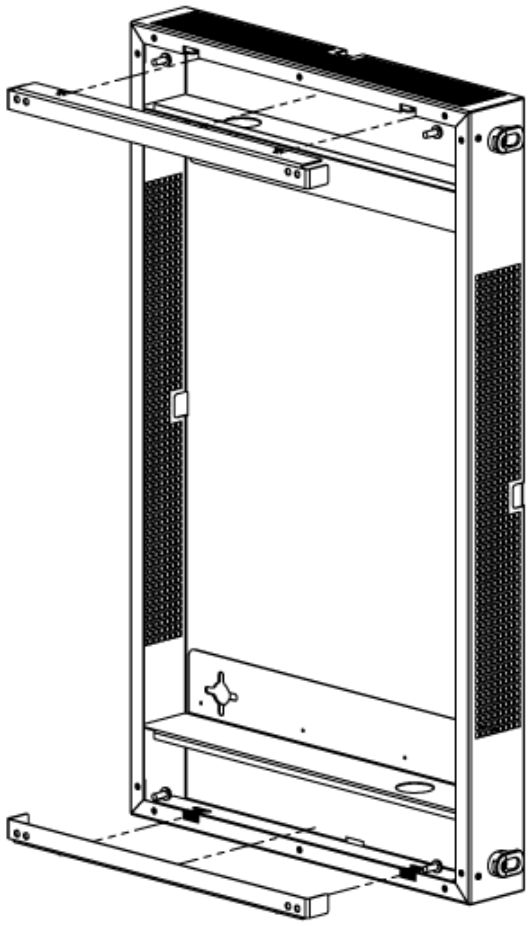

Remove VESA bars

HI-ND

4

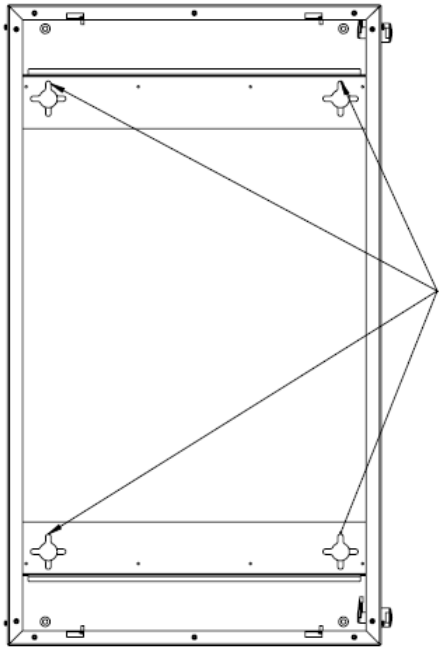

Install to wall

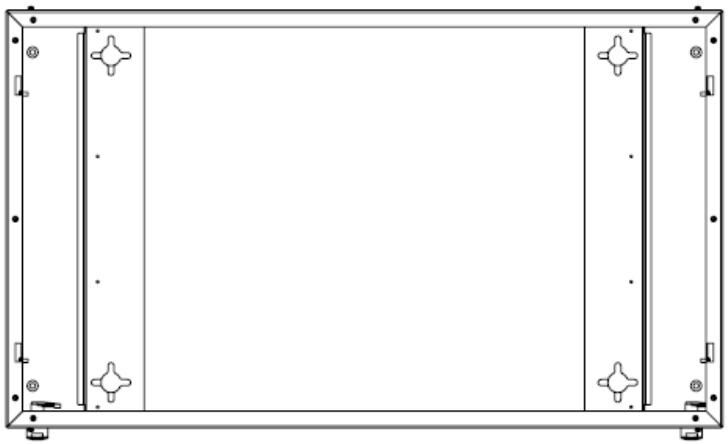

HI-ND

5

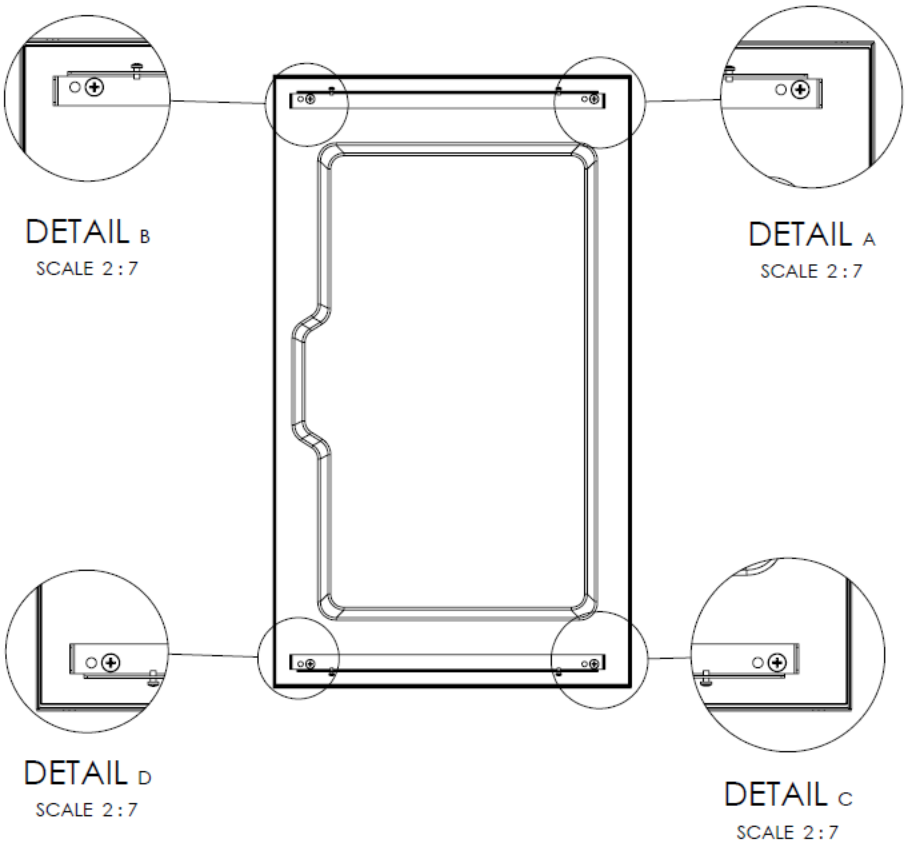

Attach vesa bars

6

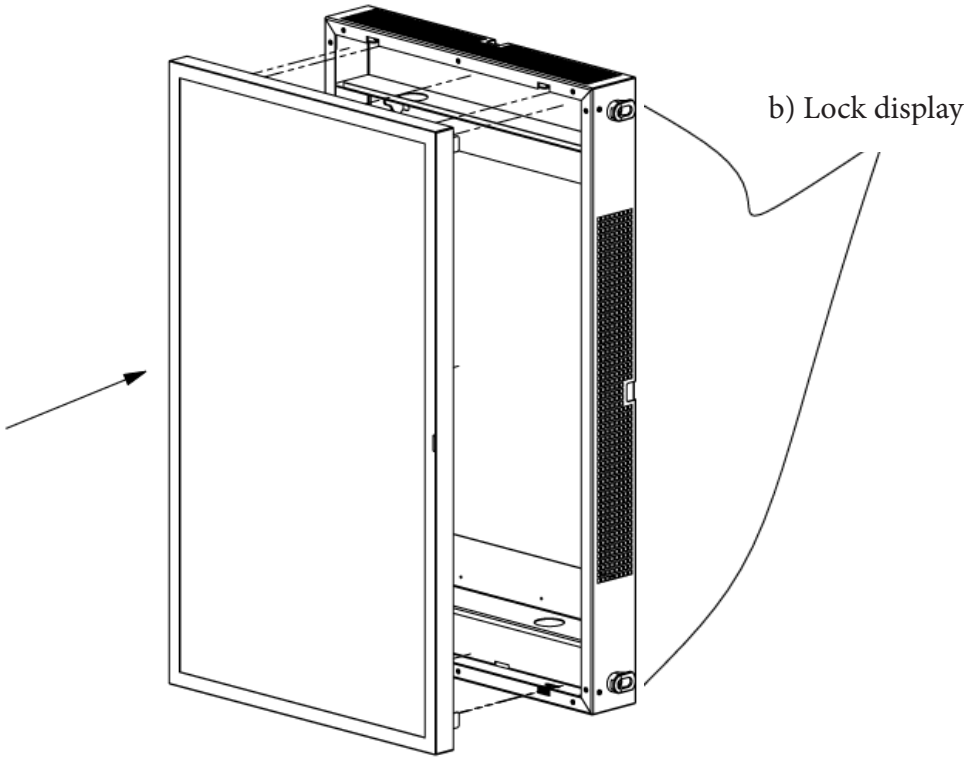

a) Attach display

HI-ND

6

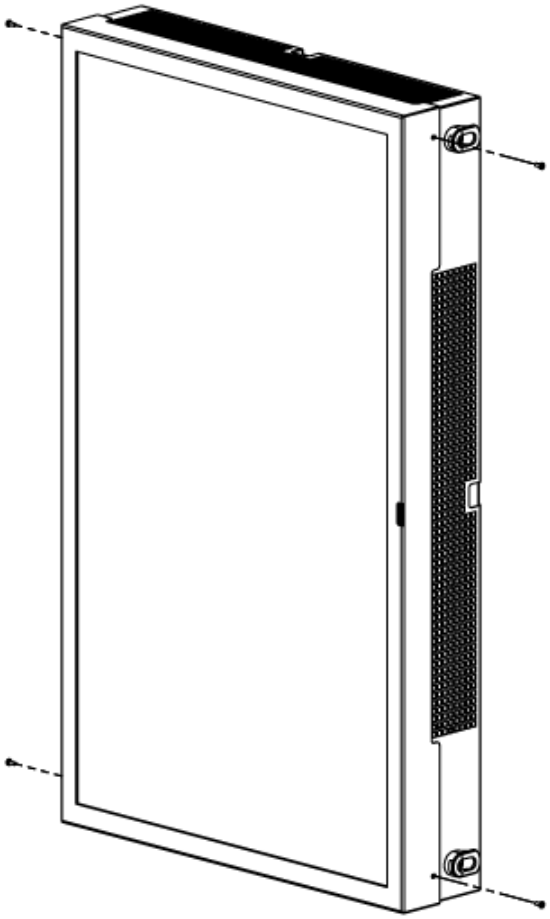

Attach front cover with screws

HI-ND

7

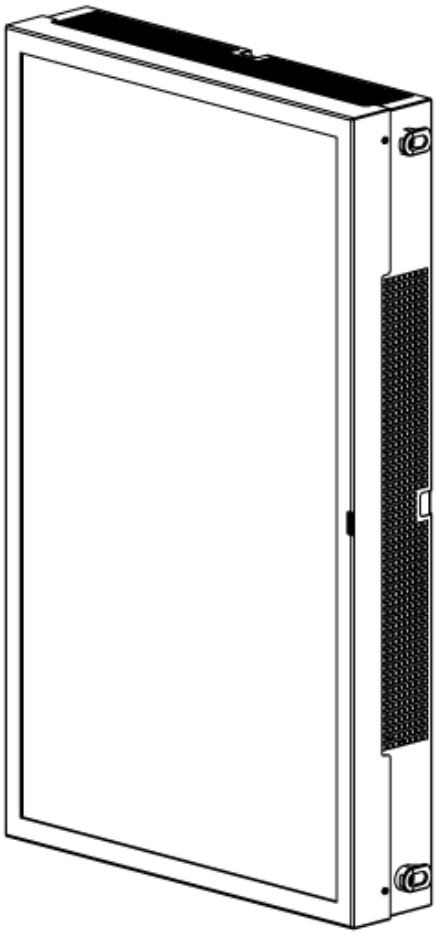

Finished!

HI-ND

WARRANTY

Five-year warranty on all mechanical products.

Three-year warranty for products including electronic components.

Please make sure to follow the installation manual. The installation manual can be downloaded by using the QR code, visible on the product package. A product is only covered by warranty if it is mounted correctly following the manual.

Hi-Nd gives no warranties except for what is explicitly set out herein. All other warranties, including as to quality of fit for purposes are, to the fullest extent permitted by law, excluded.

Detailed warranty terms

- Transport damage should be reported to us within four working days
- Send the signed shipping document to support@hi-nd.se to receive a RMA number. We require photos of the damaged product, packaging and label.
- Send the product back to HI-ND on a pallet in the original package. The purchaser pays the freight cost.
- We will send a credit if the product is found faulty after our quality controls.

Warranty does not apply under the following conditions:

If scratches on protection glass or metal are not visible from 100 cm distance
If scratches are less then 10 mm in length
If the product has been repaired or modified by other companies than HI-ND
If the product has not been installed in accordance with the installation manual
If the product has been mounted with incorrect mounting fittings to wall, floor or ceiling

Limitation of liability

Hi-Nd´s aggregated and total liability arising out of or related to the products, including any purchase order, service, performance or breach thereof, shall be limited to an amount corresponding to the purchase price of the product(s) paid by the buyer and received by Hi-Nd.

Notwithstanding what has been set out in herein, Hi-Nd shall in no event be liable towards any party, including the buyer and any of its affiliates, for any loss of production, loss of profit, revenue or opportunity, loss of use, loss of contracts, loss of goodwill, loss of business reputation, loss of anticipated savings or for any other consequential or indirect loss whatsoever.

HI-ND
Mekanikervägen 9 · SE-146 33 Tullinge · Sweden
Phone: +46 8 66 777 00 · Email: info@hi-nd.se