HP Poly Studio A2 Admin Guide

SUMMARY

This guide provides end-users with task-based user information for the named product.

Legal information

Copyright and license

© , HP Development Company, L.P. The information contained herein is subject to change without notice. The only warranties for HP products and services are set forth in the express warranty statements accompanying such products and services. Nothing herein should be construed as constituting an additional warranty. HP shall not be liable for technical or editorial errors or omissions contained herein.

Trademark credits

All third-party trademarks are the property of their respective owners.

Privacy policy

HP complies with applicable data privacy and protection laws and regulations. HP products and services process customer data in a manner consistent with the HP Privacy Policy. Please refer to HP Privacy Statement.

Open source software used in this product

This product contains open source software. You may receive the open source software from HP up to three (3) years after the distribution date of the applicable product or software at a charge not greater than the cost to HP of shipping or distributing the software to you. To receive software information, as well as the open source software code used in this product, contact HP by email at ipgoopensourceinfo@hp.com.

Table of contents

1 About this guide 1

Audience, purpose, and required skills 1

Supporting Documentation 1

Icons used in Poly documentation 1

2 Setting up the HP Poly Studio A2 hardware 2

Install and connect HP Poly Studio A2 devices 2

Install and connect HP Poly Studio A2 Audio Bridge 8

3 Introducing HP Poly Studio A2 11

HP Poly Studio A2 features and capabilities 11

HP Poly Studio A2 overview 12

- HP Poly Studio A2 Audio Bridge hardware overview 12
- HP Poly Studio A2 Audio Bridge LED status indicators 13
- HP Poly Studio A2 Audio Bridge ports 13
- HP Poly Studio A2 Table Mic hardware overview 13
- HP Poly Studio A2 Table Mic LED status indicators 14

Poly NoiseBlockAI with HP Poly Studio A2 15

HP Poly Studio A2 room configuration options 16

Cabling HP Poly Studio A2 devices 20

- Cabling HP Poly Studio A2 devices with Poly Studio X Series video bars 20
- Cabling HP Poly Studio A2 devices with Poly Studio V Series video bars 22
- Cabling HP Poly Studio A2 devices with Poly Studio G62 23

Selectable PoE switch power classes 24

Custom cabling with HP Poly Studio A2 25

- Custom cabling support and limitations 25

4 Configuring HP Poly Studio A2 27

Pair an HP Poly Studio A2 Audio Bridge device to a Poly video conferencing system 27

View connected HP Poly Studio A2 devices 27

Identify a HP Poly Studio A2 Table Mic device 27

Enable Multi-Mic Mode 28

Enable NoiseBlockAI v2 28

5 Troubleshooting HP Poly Studio A2 devices **29**
Locate the serial number on HP Poly Studio A2 devices 29
HP Poly Studio A2 Audio Bridge not pairing 29
HP Poly Studio A2 Table Mic not pairing 30
HP Poly Studio A2 Audio Bridge LED is blinking red 30
Factory Restore the HP Poly Studio A2 Audio Bridge 30
6 Getting help **31**
HP Inc. addresses 31
Document information 32

1 About this guide

This guide provides administrators with information about configuring, maintaining, and troubleshooting HP Poly Studio A2.

Audience, purpose, and required skills

This guide is intended for beginning users, as well as intermediate and advanced users, who want to learn more about the features available with HP Poly Studio A2.

Supporting Documentation

In addition to this admin guide, review the following documentation to set up, configure, and use your system.

- Poly Partner Mode Administrator Guide
- Poly Partner Mode User Guide
- Poly Video Mode Administrator Guide
- Poly Video Mode User Guide

Icons used in Poly documentation

This section describes the icons used in Poly documentation and what they mean.

WARNING! Indicates a hazardous situation that, if not avoided, **could** result in serious injury or death.

CAUTION: Indicates a hazardous situation that, if not avoided, **could** result in minor or moderate injury.

IMPORTANT: Indicates information considered important but not hazard-related (for example, messages related to property damage). Warns the user that failure to follow a procedure exactly as described could result in loss of data or in damage to hardware or software. Also contains essential information to explain a concept or to complete a task.

NOTE: Contains additional information to emphasize or supplement important points of the main text.

TIP: Provides helpful hints for completing a task.

2 Setting up the HP Poly Studio A2 hardware

Set up the HP Poly Studio A2 hardware as described in the following steps.

Install and connect HP Poly Studio A2 devices

HP Poly Studio A2 comes with flexible installation options.

You can run cables of daisy-chained HP Poly Studio A2 Table Mic devices either across the table or discreetly hide them under the table via bored holes. The adhesive mounting magnets placed on the table act as mounting docks as well as markers for optimal placement positions for the HP Poly Studio A2 Table Mic devices.

The HP Poly Studio A2 Table Mic device comes with a magnetic plate, and the following cables:

- Pre-connected 6-meter (19.7-foot) JST (female) to phoenix (male) cable
- 2-meter (6.6-foot) JST (male) to phoenix (female) cable
- 1.8-meter (5.9-foot) JST (male) to JST (female) cable

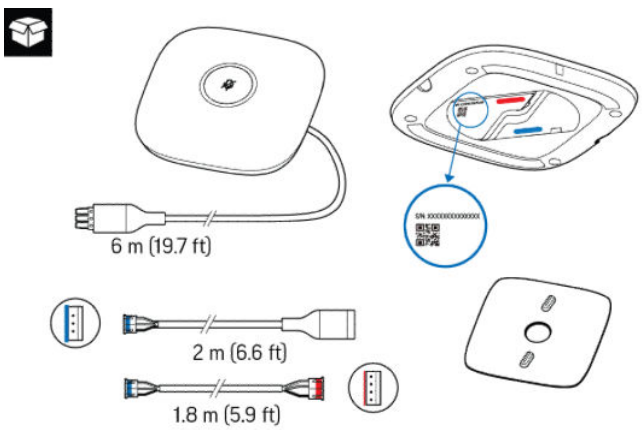

The serial number, shown numerically and represented by a QR code, displays on the underside of the HP Poly Studio A2 Table Mic device.

To set up HP Poly Studio A2 devices, you need a measuring tape and a small Philips screwdriver. To bore holes in the tables for discreet cabling, you also need a drill with a 10 mm (0.39 in.) drill bit.

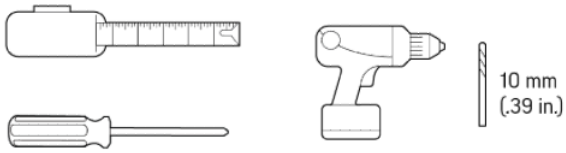

1. Using the measuring tape, mark out the optimal placement of the table mics.

   If connecting the HP Poly Studio A2 Table Mic with the 1.8-meter (5.9-foot) JST (male) to JST (female) cable above the table, place them between 1.2 m (4 ft) and 1.6 m (5.2 ft) apart. To place them further apart or to hide the cables under the table, use both the pre-connected 6-meter (19.7-foot) JST (female) to phoenix (male) cable and 2-meter (6.6-foot) JST (male) to phoenix (female) cable. For more information, review Poly Studio A2 Room Configuration on page 16.

NOTE: With Poly NoiseBlockAI switched off, the pickup range is 1.8 meters. With Poly NoiseBlockAI switched on, the pickup range is up to 4.3 meters apart. For more information, review NoiseBlockAI with HP Poly Studio A2 on page 15.

1

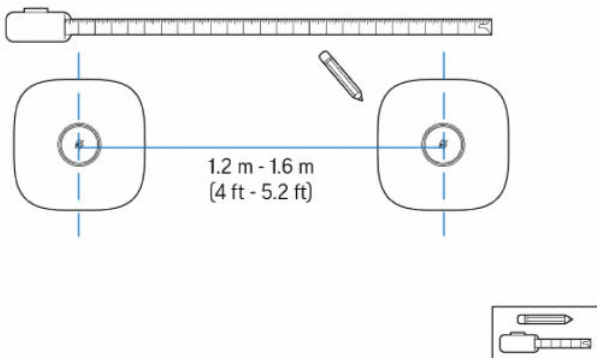

2. Peel back the sticker on the magnetic mounting plate and stick it to the conference table, aligning the edges in parallel with the table edges.

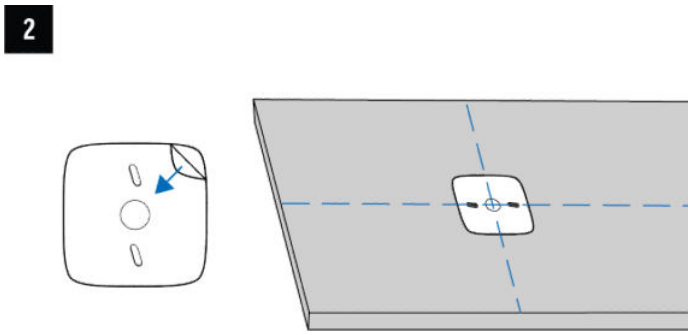

3. Use the Philips screwdriver to loosen the screws on the underside of the HP Poly Studio A2 Table Mics. These are captive screws that are designed to remain attached even when fully loosened.

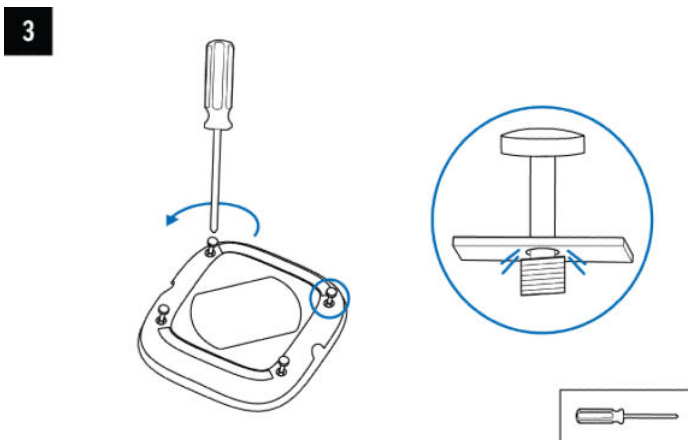

4. For a below-table discreet cabling configuration, go to step 7.

   For above-table cabling, plan your cabling configuration. The phoenix end of the preconnected cable for the HP Poly Studio A2 Table Mic device connects to the HP Poly Studio A2 Audio Bridge device. Additional HP Poly Studio A2 Table Mic devices connect either directly into the HP Poly Studio A2 Audio Bridge device or in a daisy-chain configuration using the JST to JST cable.

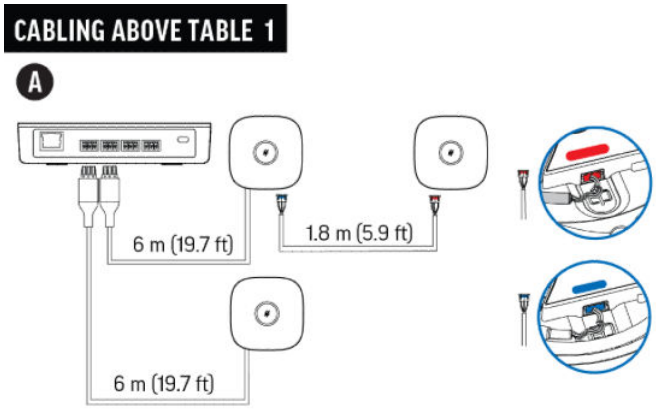

5. The JST cables and ports are color-coded and have different sizes and shapes. Connect the (narrower) blue male cable connectors to the blue ports and (wider) red female cable connectors to red ports. Make sure to fully push the connectors into the ports. To reduce unnecessary length in cables, feed extra cable slack through the channels in the HP Poly Studio A2 Table Mic devices in a clockwise direction. Replace the backing cover of the HP Poly Studio A2 Table Mic device and secure using the four captive screws.

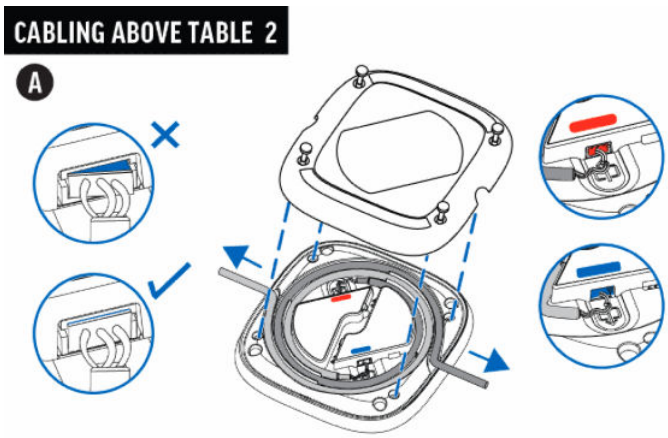

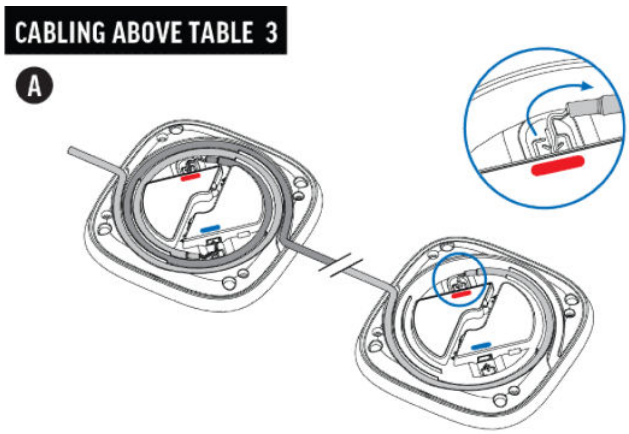

6. Place the HP Poly Studio A2 Table Mic devices on the magnetic mounting plates.

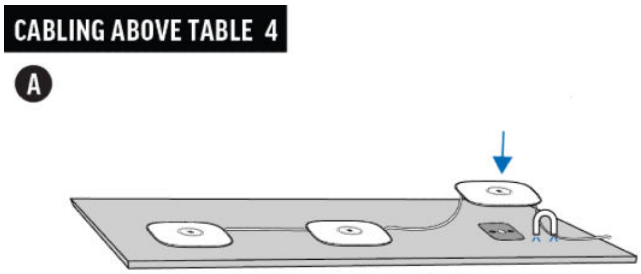

7. For a below-table discreet cabling setup, plan your cabling configuration. Connect the phoenix end of the preconnected cable for the HP Poly Studio A2 Table Mic device to the HP Poly Studio A2 Audio Bridge device. Connect additional HP Poly Studio A2 Table Mic devices either directly into the HP Poly Studio A2 Audio Bridge device or in a daisy-chain configuration. To span extended distances when daisy-chaining HP Poly Studio A2 Table Mic devices, connect the 2-meter (6.5-foot) JST (male) to phoenix (female) cable to the preconnected phoenix (male) to JST cable.

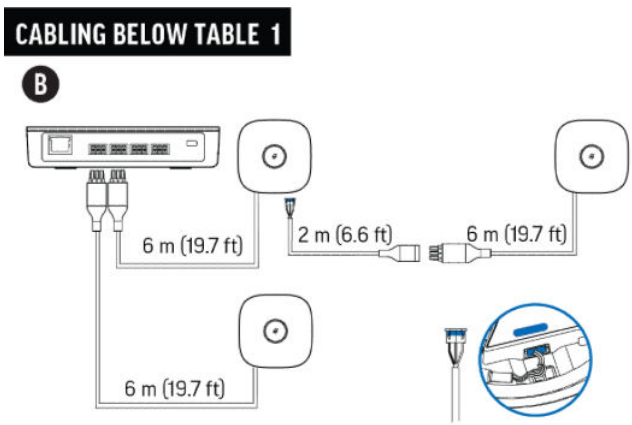

8. Using the hole of the affixed magnetic plate as a guide, drill a 10 mm (0.39 in.) hole through the conference table. Repeat for all HP Poly Studio A2 Table Mic devices.

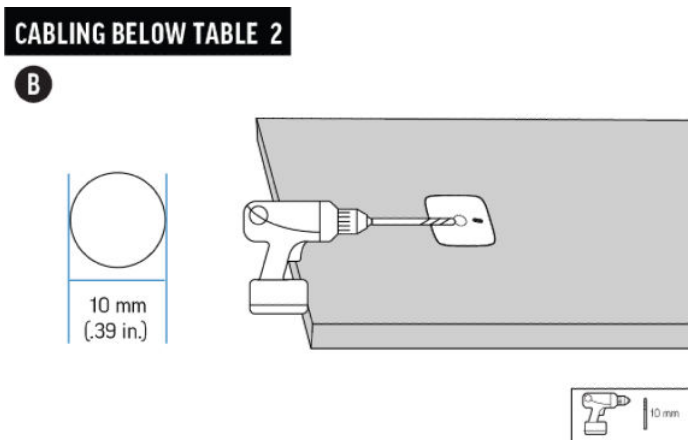

9. The JST cables and ports are color-coded and have different sizes and shapes. Connect the (narrower) blue male cable connectors to the blue ports and (wider) red female cable connectors to red ports Make sure to fully push the connectors into the ports. Before replacing the backing cover, feed the cables through the space in the back panel. Secure the backing cover using the four captive screws.

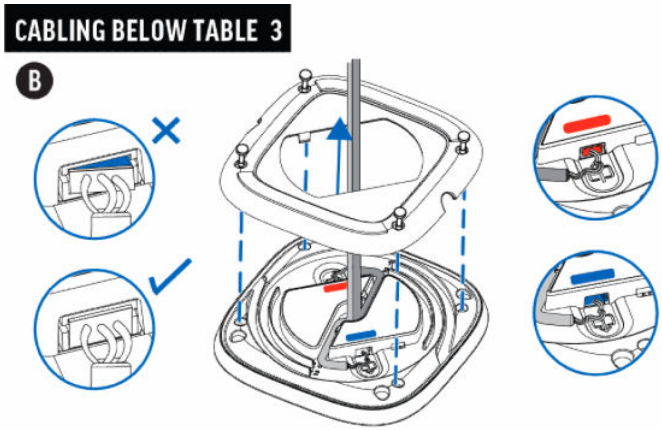

10. Feed the cables through the magnetic plates and bored holes in the conference table.

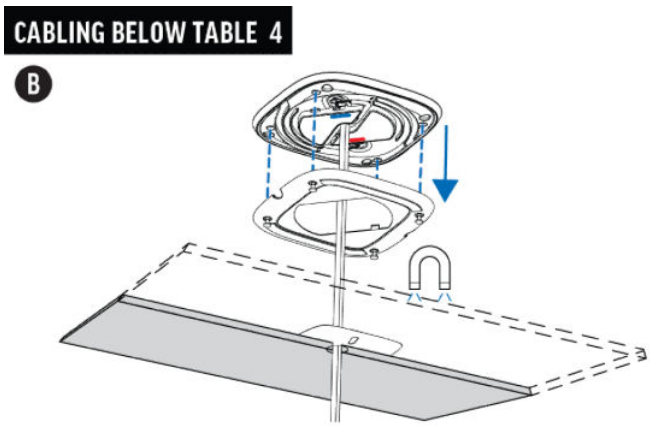

11. Place the HP Poly Studio A2 Table Mic devices on the magnetic mounting plates.

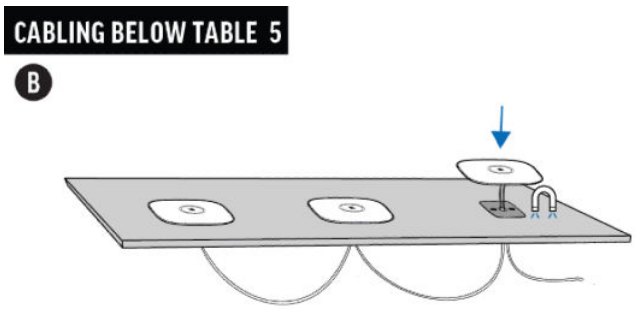

Install and connect HP Poly Studio A2 Audio Bridge

Once you mount the HP Poly Studio A2 Table Mic devices in their optimal position and cable them to each other, connect them to the HP Poly Studio A2 Audio Bridge device and the HP Poly video room configuration.

The following steps outline the basic configuration of HP Poly Studio A2 devices with a Poly Studio G62 video conferencing system. Review Cabling HP Poly Studio A2 devices on page 22 for details on additional configuration options, for example, using an Poly Studio X Series video bar or using an HP Mini G9+ for Windows configuration.

1. To set up the HP Poly Studio A2 Audio Bridge, you need a spirit level and a drill with a 6 mm (1/4 inch) drill bit.

2. The HP Poly Studio A2 Audio Bridge device comes with a mounting plate, an 8-meter (26-foot) phoenix cable, a 3.6-meter (11.8-foot) CAT6A cable, four wall plugs, and four 1-inch #8 screws.

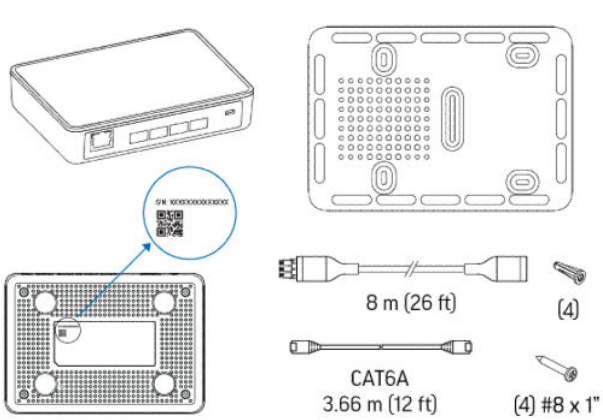

3. Use the spirit level to mark the screw points of the metal plate. Drill four 6-mm (1/4 inch) holes.

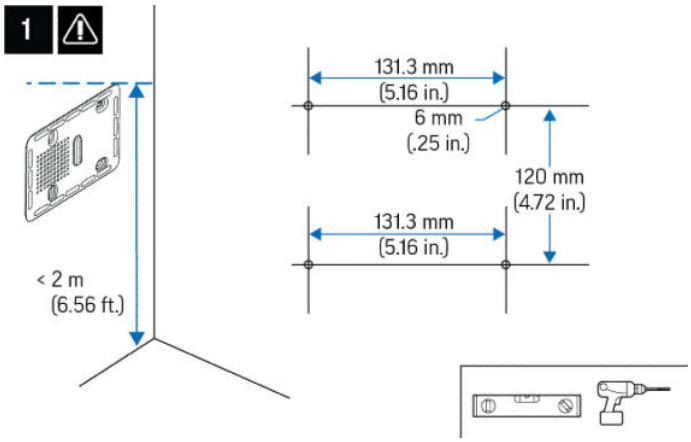

4. Place the wall plugs in the drill holes. Remove the stickers on the back of the metal plate and stick the plate to the wall, ensuring the drill holes line up with the gaps in the metal plate. Screw in the four screws, securing the metal plate to the wall.

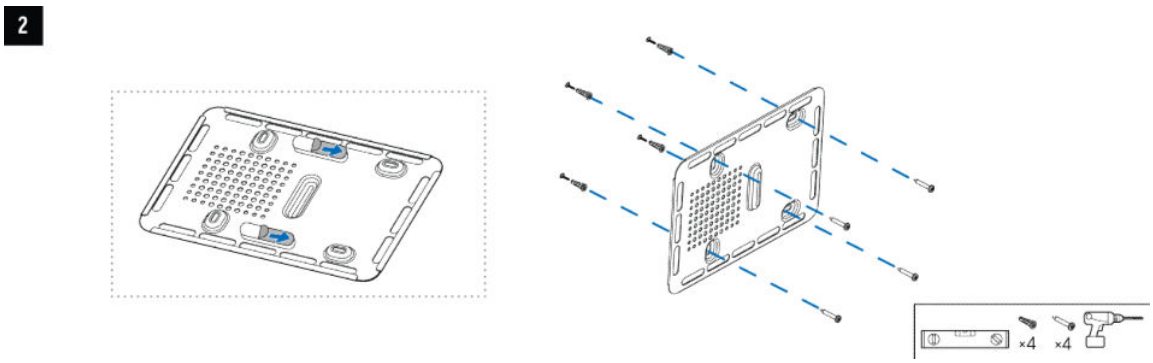

5. Place the HP Poly Studio A2 Audio Bridge device on the metal plate. Magnetic disks on the bottom of the audio bridge attach directly to the metal plate.

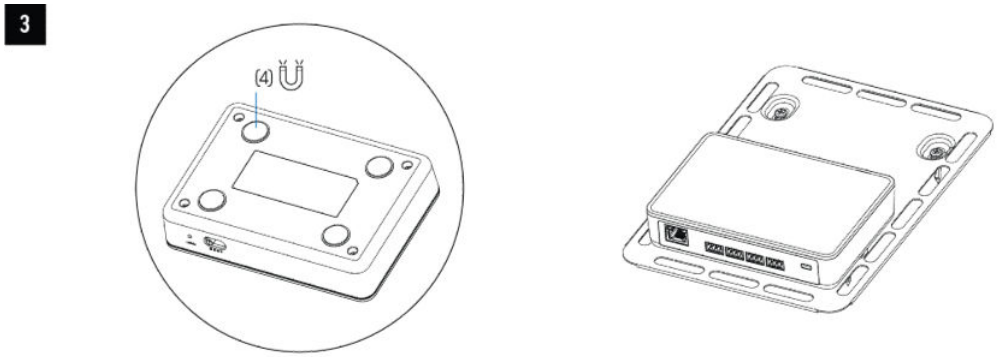

6. Using a CAT6A cable, connect the PoE port of the HP Poly Studio A2 Audio Bridge device to the **OUT** port of a PoE injector. Connect the **IN** port of the PoE injector to the LLN port of the video

conferencing system or Poly video bar. For more information, review Cabling HP Poly Studio A2 devices on page 22.

4

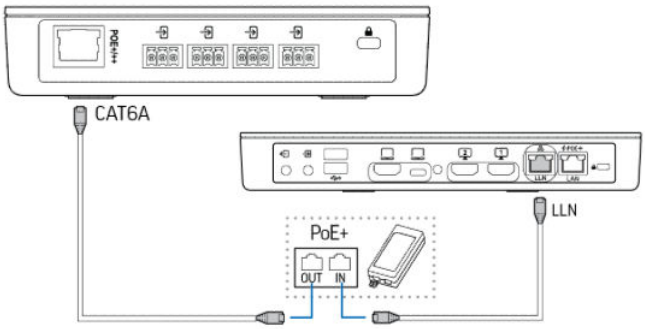

7. Connect the phoenix end of the preconnected cable of the HP Poly Studio A2 Table Mic device to the HP Poly Studio A2 Audio Bridge device.

5

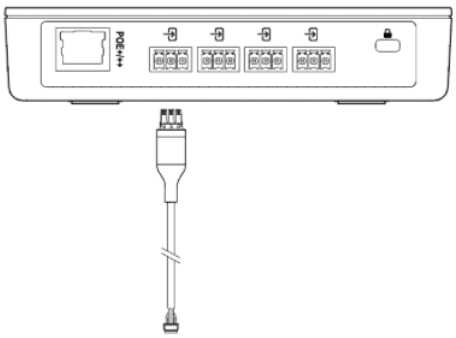

8. For optimal cable management, mount the PoE injector on the magnetic metal plate beside the HP Poly Studio A2 Audio Bridge device.

6

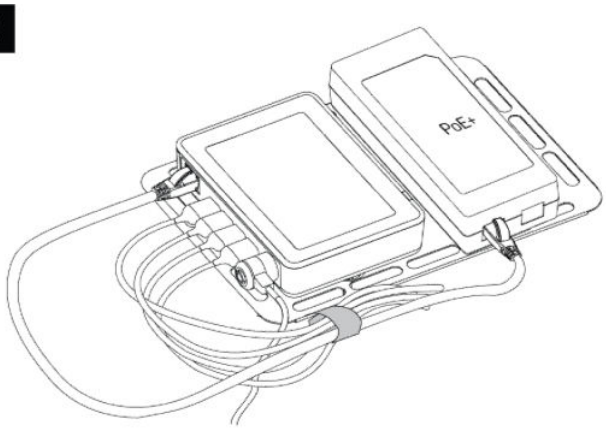

3 Introducing HP Poly Studio A2

The HP Poly Studio A2 audio room solution delivers an inclusive hybrid meeting experience that ensures participant voices are clearly heard wherever they are in the room.

This audio solution, powered by Poly StudioNet, provides flexible configuration options for scalability with the ability to daisy-chain multiple microphones.

The HP Poly Studio A2 Audio Bridge interoperates with Poly StudioNet on HP Poly video systems.

HP Poly Studio A2 features and capabilities

HP Poly Studio A2 devices provide a modular audio solution for conference rooms.

HP Poly Studio A2 supports the following features:

- Flexible setup, scalable to any room size
- High-quality audio and unmatched clarity
- Streamlined setup with discreet cabling
- Increased speech intelligibility with microphone auto-switching when connected to a Poly Studio X video bar with Poly NoiseBlockAI
- Unified control with Poly Lens

NOTE: HP Poly Studio A2 Table Mics are not interoperable with IP Poly microphones.

HP Poly Studio A2 overview

HP Poly Studio A2 audio bridge and microphones provide simplified configuration with Pro A/V performance. The new design includes LED indicators and intuitive cable wrapping for discrete mounting and flexible installation.

HP Poly Studio A2 Audio Bridge hardware overview

HP Poly Studio A2 Audio Bridge receives audio and audio control for HP Poly video systems.

HP Poly Studio A2 Audio Bridge is powered by PoE, which provides power and connection to all audio devices connected to it directly or via a daisy-chain configuration. HP Poly Studio A2 Audio Bridge converts A2B to StudioNet Audio and StudioNet Audio to A2B.

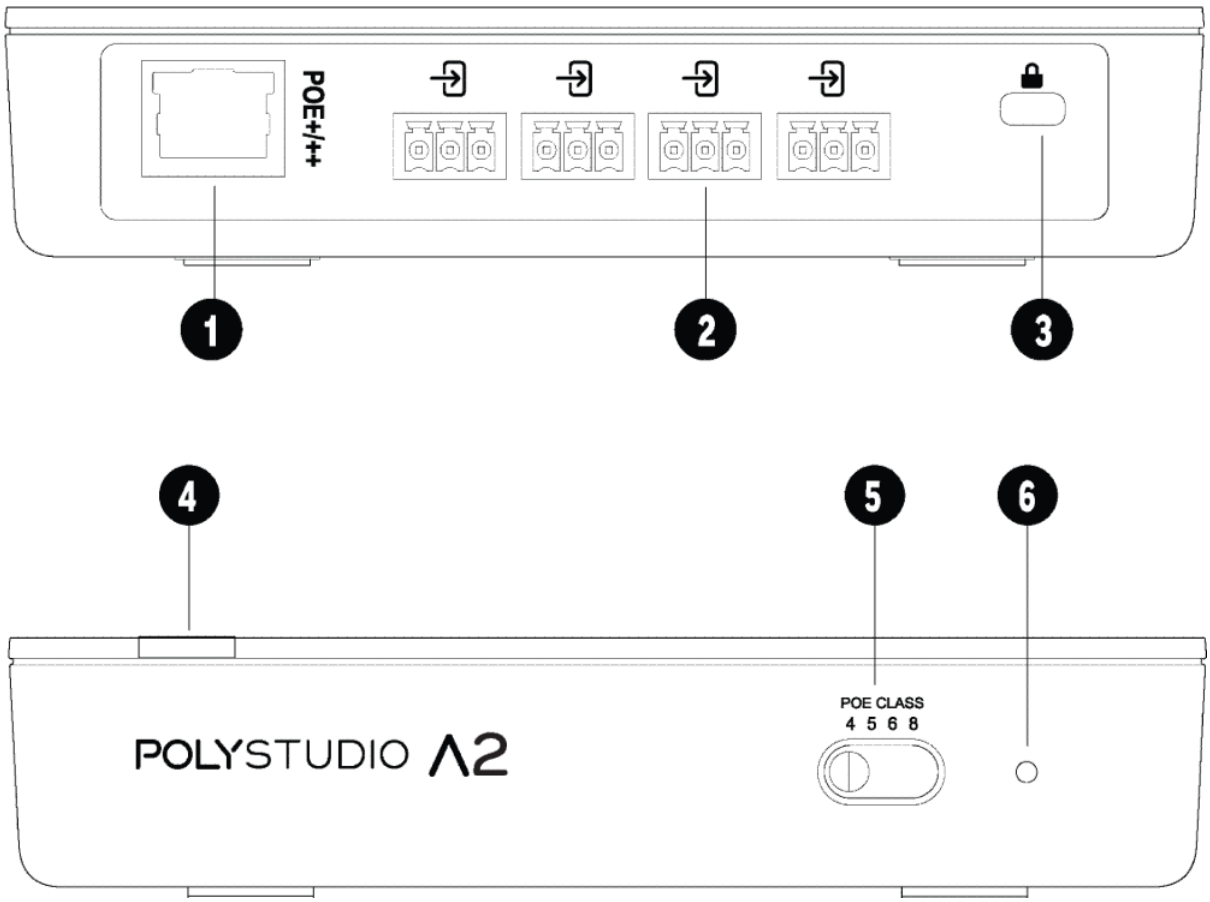

Table 3-1 HP Poly Studio A2 Audio Bridge

Reference number	LED behavior
1	PoE port
2	A2B bus ports
3	Security lock
4	LED indicator
5	PoE switch
6	Factory restore pinhole

HP Poly Studio A2 Audio Bridge LED status indicators

The following table lists the LED behavior for HP Poly Studio A2 Audio Bridge. The table lists each LED indicator and its associated status.

Table 3-2 LED status indicators

System status	LED Behavior
Bootup initialization	Breathing white
Powered on	Solid white
Firmware update/factory reset	Breathing amber
Low power alert	Blinking red
One or more connected mics not working	Blinking red
Recovering from an error	Blinking red for 2 minutes (see HP Poly Studio A2 Audio Bridge LED is blinking red on page 30)

HP Poly Studio A2 Audio Bridge ports

The following table outlines the port usage on the HP Poly Studio A2 Audio Bridge devices.

Table 3-3 HP Poly Studio A2 Audio Bridge system ports

Port	TCP/UDP	State	Usage
18888	TCP	Listening	StudioNet protocol
4443	TCP	Listening (when active)	StudioNet update and log upload
2000	UDP	Open	StudioNet discovery protocol
8000-8100	UDP	Open	StudioNet media to/from paired StudioNet Primary
319,320	UDP	Open	StudioNet audio clock synchronization with paired StudioNet primary
123	UDP	Open	StudioNet time synchronization with paired StudioNet primary

HP Poly Studio A2 Table Mic hardware overview

HP Poly Studio A2 Table Mic devices are table-mounted microphones that contain four cardioid microphone elements, a capacitive touch mute button, and integrated status LEDs.

Distribute up to eight microphones across four independent daisy-chains from the HP Poly Studio A2 Audio Bridge device to handle any size room, even extra-large conferencing areas.

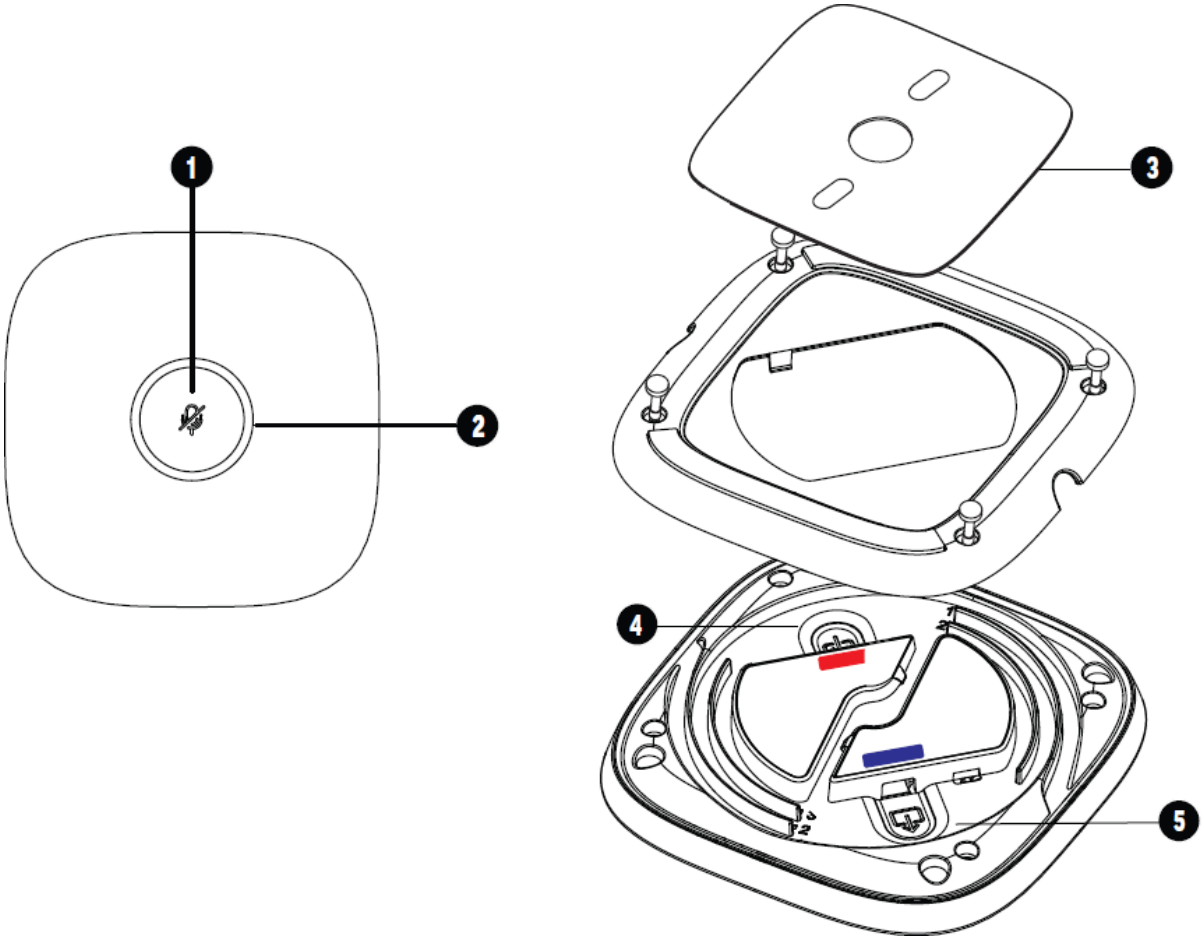

Table 3-4 **HP Poly Studio A2 Table Mic hardware feature descriptions**

Reference number	Feature description
1	Mute
2	LED status indicator
3	Magnetic table plate
4	Cable input
5	Cable output

HP Poly Studio A2 Table Mic LED status indicators

The following table lists the LED behavior for your HP Poly Studio A2 Table Mic devices. The table lists each LED indicator and its associated status.

Table 3-5 **LED status indicators**

System status	LED behavior
Boot-up initialization	Breathing white
Active call unmuted	Solid green

Table 3-5 LED status indicators (continued)

System status	LED behavior
Active call muted	Solid red
Ready to pair/pairing in progress	Blinking blue and white
Pairing successful	Solid blue
Firmware update/factory reset	Breathing amber
Device identification/channel identification	Blinking amber

Poly NoiseBlockAI with HP Poly Studio A2

Poly NoiseBlockAI uses AI and machine learning to identify and block distracting noises such as keyboard typing, paper shuffling, and HVAC humming and reverberation during calls, ensuring a seamless call experience. Poly NoiseBlockAI keeps conversations on track and enables meeting participants to be heard more clearly.

With Poly NoiseBlockAI enabled on HP Poly Studio A2, the pickup distance increases from the standard 1.8 m (6 ft) to 4.3 m (14 ft). This means that you can place your HP Poly Studio A2 Table Mic devices up to 4.3 m (14 ft) apart.

For information on enabling Poly NoiseBlockAI, review the Configure HP Poly Studio A2 on page 27 section.

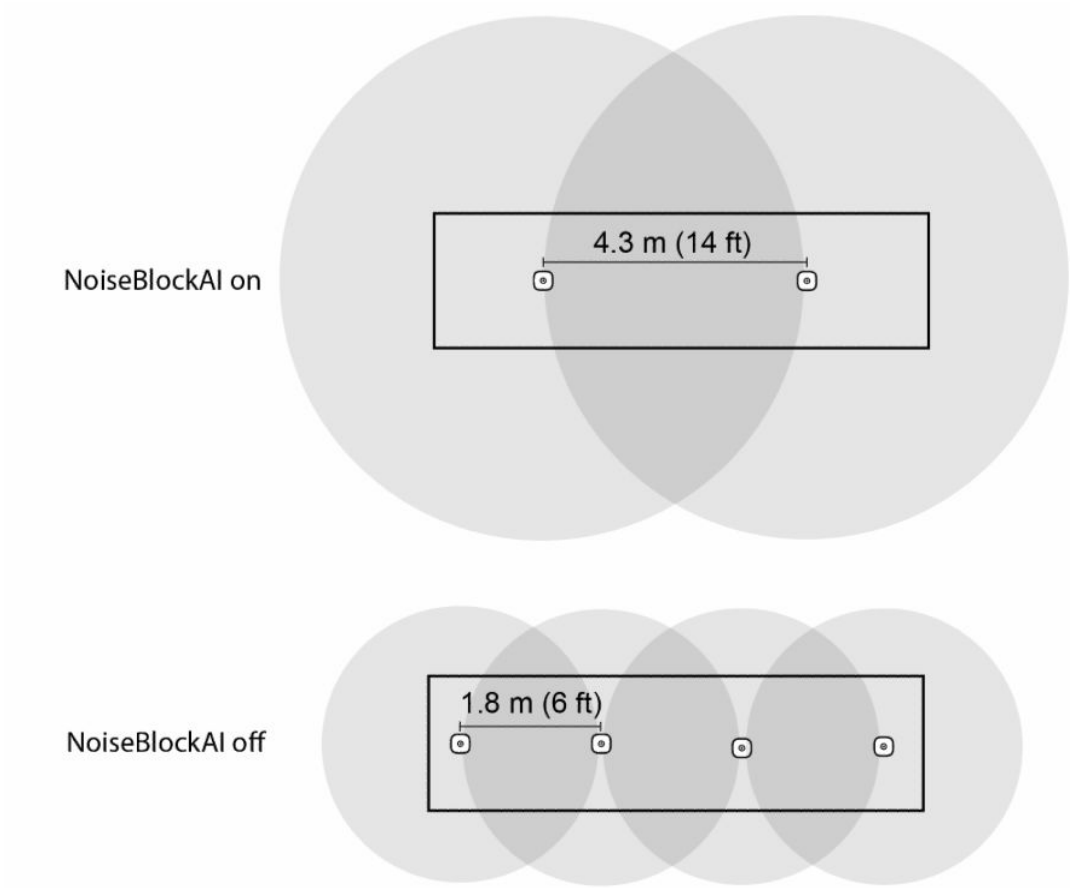

HP Poly Studio A2 room configuration options

HP Poly recommends using the appropriate number of devices based on your conferencing room size.

Table 3-6 Recommended number of HP Poly Studio A2 devices by room size

Room size	Dimensions	Recommended Poly video conferencing device options	Recommended number of table mics (in addition to video bar mics)
Small	10 ft x 15 ft 3 m x 4.5 m	Poly Studio V12	1
Small	10 ft x 15 ft 3 m x 4.5 m	Poly Studio X32	1 to 2
Medium	15 ft x 20 ft 4.5 m x 6 m	Poly Studio V12	1
Medium	15 ft x 20 ft 4.5 m x 6 m	Poly Studio V52 Poly Studio X52	1 to 4
Large	18 ft x 28 ft 5.5 m x 8.5 m	Poly Studio V72 Poly Studio X72	4
Extra-large	25 ft x 32 ft 7.6 m x 9.8 m	Poly Studio G62	8

When positioning microphones in a conference space, consider the following recommendations:

- Placing microphones with a similar distance between participants helps the far end hear conversations more smoothly and evens the sound.
- Direct sound is preferable to reflected sound. Avoid positioning participants with their backs to a microphone, which can cause their voices to sound dull and contain significant amounts of room reverberation.
- Multiple microphones are ideal for meetings with rectangular conference tables where people sit along a long edge. Using multiple microphones ensures there's even coverage of audio input for each participant.
- Avoid placing microphones where direct airflow from fans or HVAC might impact the audio input to the microphone.
- The minimum distance to place a microphone from a video bar with integrated speaker is 2.5 m (8.2 ft).

Table 3-7 Quantity of supported paired devices by video conferencing system

Paired device	Poly Studio G62	Poly Studio X52	Poly Studio X72
Poly TC10 (Corp net)	1	1	1
Poly Studio E70	2	2	2
HP Poly Studio A2 Audio Bridge (LLN net)	1	1	1

Table 3-7 Quantity of supported paired devices by video conferencing system (continued)

Paired device	Poly Studio G62	Poly Studio X52	Poly Studio X72
HP Poly Studio A2 Table Mic	8	4	4
Netgear	1	1	1
4K TV	1	1	1

Supported ecosystems by video conferencing system

The following ecosystems are supported on Poly Studio G62, Poly Studio X52, and Poly Studio X72:

- Zoom
- Microsoft
- Poly VideoOS

Figure 3-1 Typical configuration of a small room with Poly Studio V12 (Poly NoiseBlockAI not enabled)

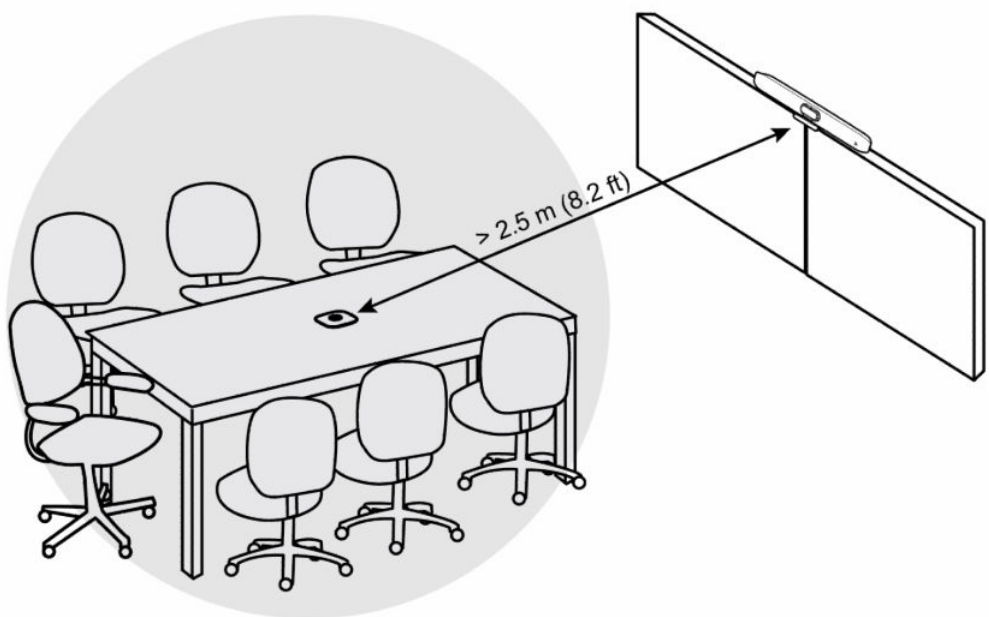

Figure 3-2 Typical configuration of a small room with Poly Studio X32 (Poly NoiseBlockAI not enabled)

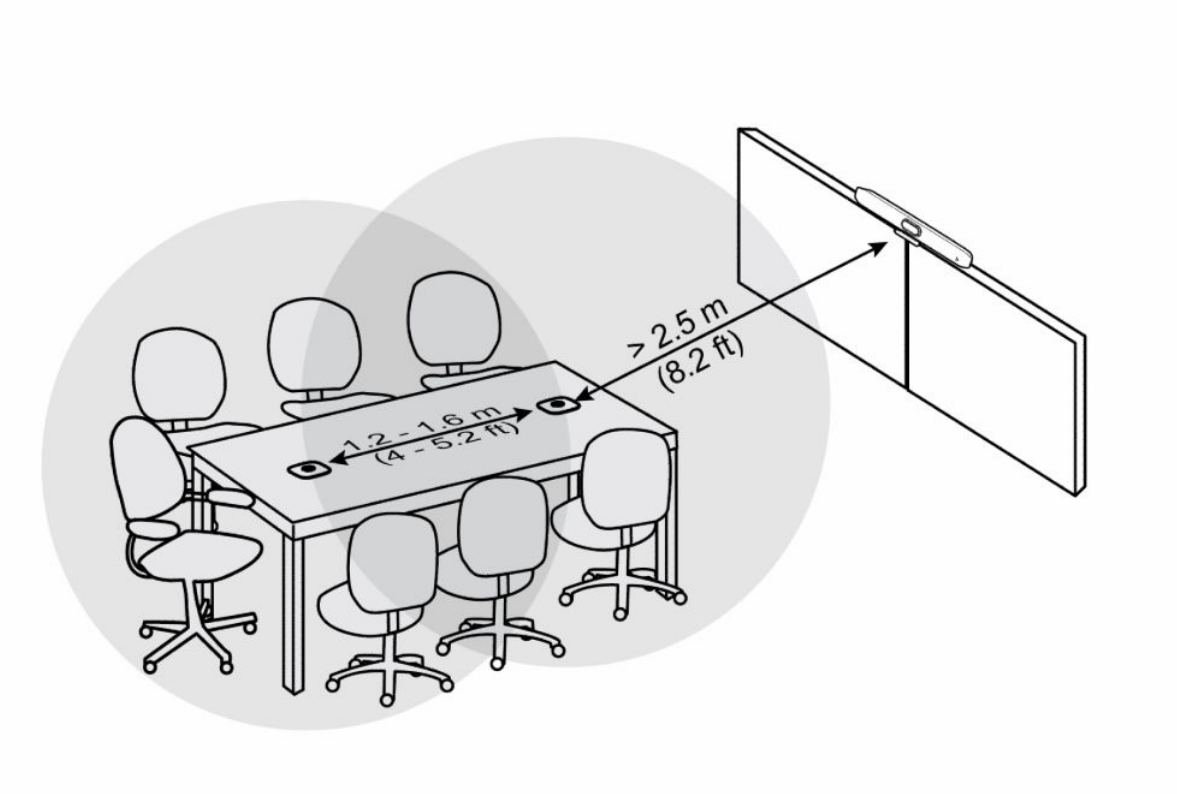

Figure 3-3 **Typical configuration of a medium room (Poly NoiseBlockAI not enabled)**

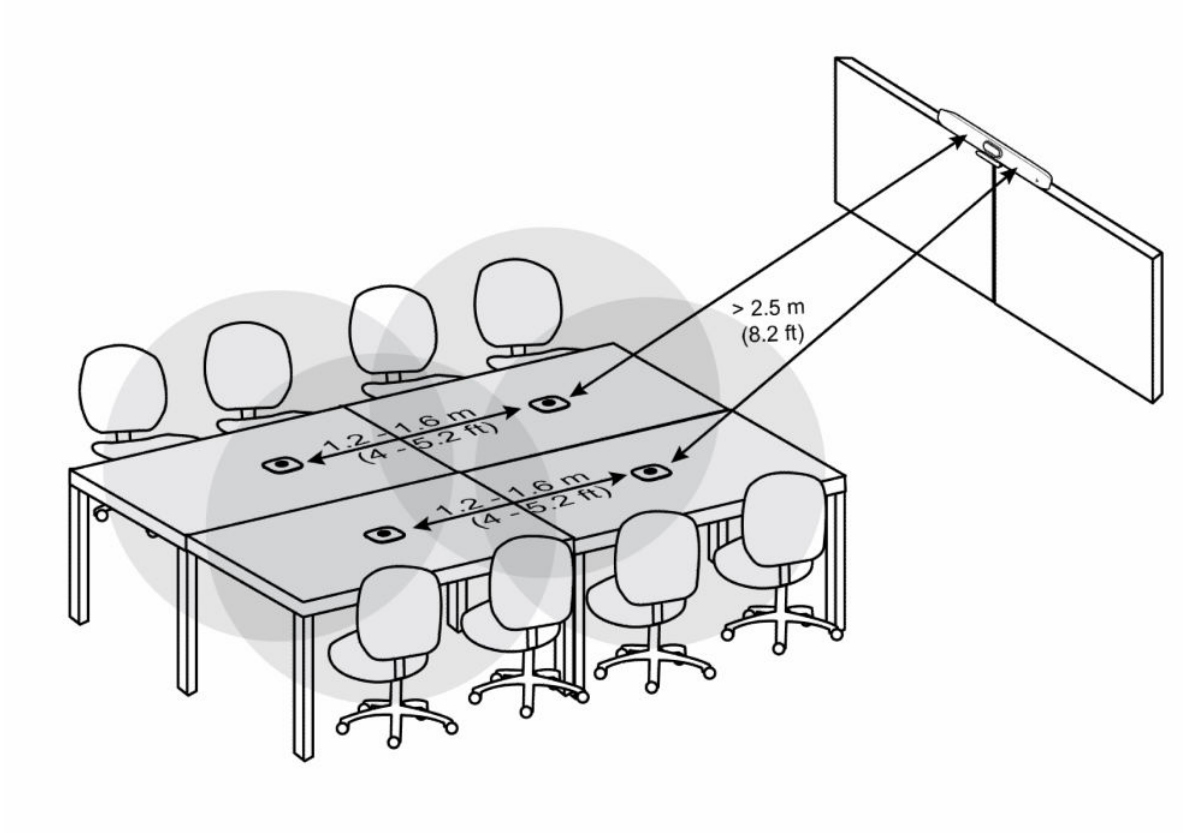

Figure 3-4 **Typical configuration of a large/extra large room (Poly NoiseBlockAI not enabled)**

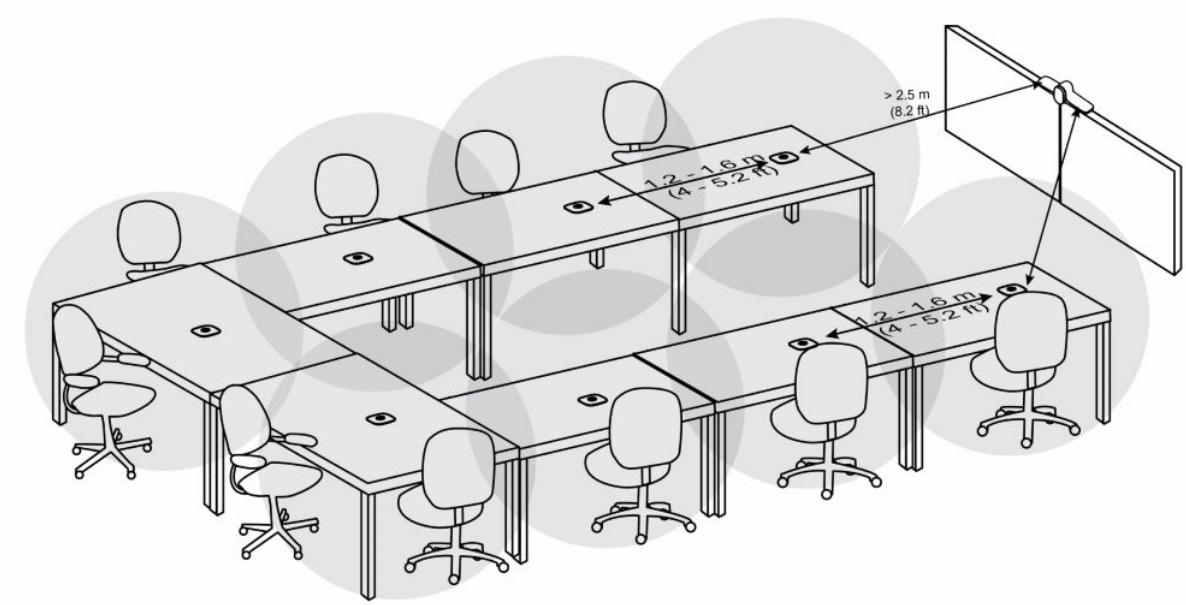

Cabling HP Poly Studio A2 devices

HP Poly Studio A2 provides flexible configuration options that can easily adapt and expand as room requirements grow and change.

The following video bars don't have a dedicated LLN port and require a USB Type-A to Ethernet adapter that converts the existing LAN port to an LLN:

- Poly Studio X32
- Poly Studio X52
- Poly Studio V52

When you connect the adapter from the USB Type-A port of the video bar to the corporate network and restart the video bar, the built-in LAN port on the video bar becomes an LLN. The USB Type-A to Ethernet port becomes the primary network. To ensure compatibility, use the approved HP adapter, HP USB 3.0 to Gig RJ-45 Adapter G2 (part number: M91114-001).

IMPORTANT: Use shielded twisted pair (STP) Ethernet cables between the PoE injector and the HP Poly Studio A2 Audio Bridge device, and between the PoE injector and the Poly video bar.

NOTE: You must connect the HP Poly Studio A2 Table Mic devices to the HP Poly Studio A2 Audio Bridge device before connecting the PoE power. If you connect the mics after you power up the audio bridge, the audio bridge doesn't detect the mics.

Cabling HP Poly Studio A2 devices with Poly Studio X Series video bars

HP Poly Studio A2 provides configuration options for various room sizes with Poly Studio X Series video bars.

NOTE: If using a Poly Studio X32 system, power it up before powering up the HP Poly Studio A2 Audio Bridge device. Once the Poly Studio X32 system starts searching or gets an IP address, power up the HP Poly Studio A2 Audio Bridge device.

Figure 3-5 **HP Poly Studio A2 with Poly Studio X Series video bars configuration**

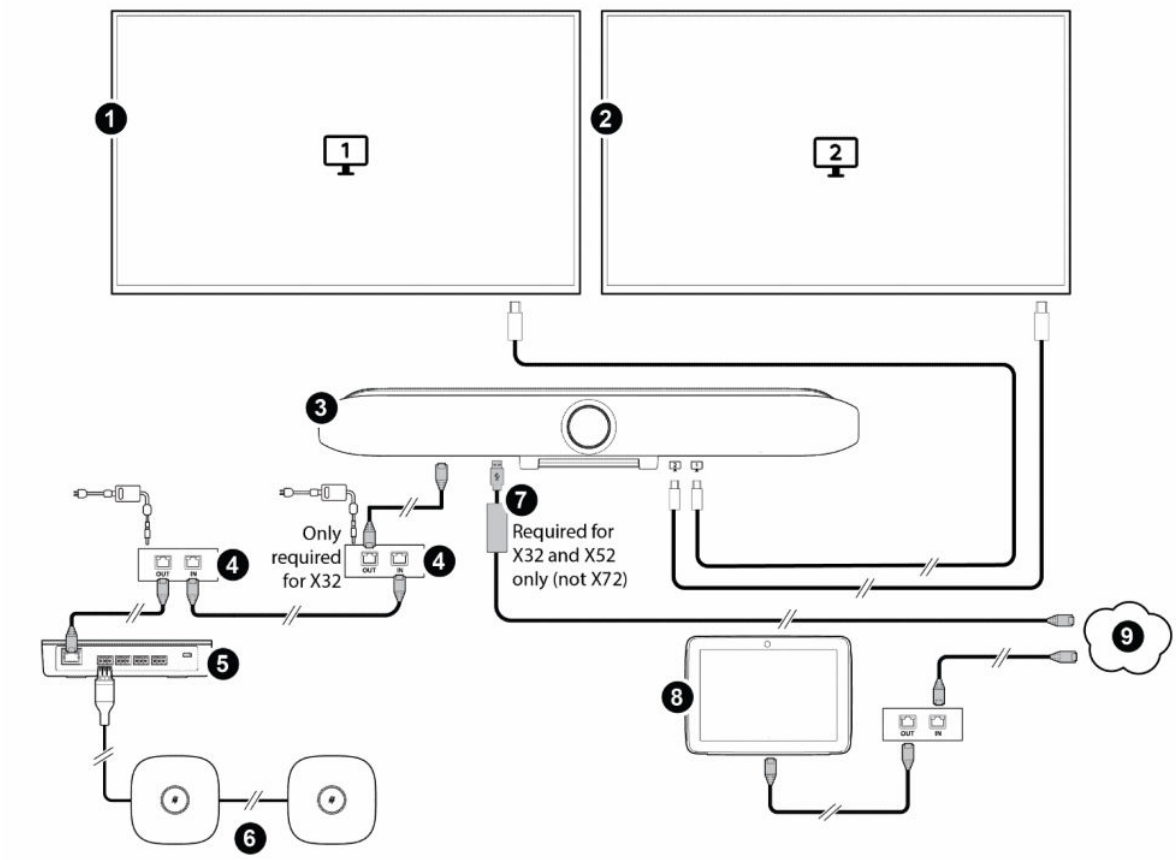

Table 3-8 **Poly Studio X32 configuration hardware key**

Item	Description
1	Display 1
2	Display 2
3	Poly Studio X Series video bar
4	PoE adapters - one required for Poly Studio X52 and Poly Studio X72; two required for Poly Studio X32
5	HP Poly Studio A2 Audio Bridge device
6	HP Poly Studio A2 Table Mic devices
7	USB Type-A to Ethernet adapter (not required for Poly Studio X72)
8	Poly touch controller
9	LAN

Cabling HP Poly Studio A2 devices with Poly Studio V Series video bars

HP Poly Studio A2 is supported on a Poly Studio V52 and Poly Studio V72 connected to a Poly Studio Base Kit G9 Plus system on Windows. Review the following diagram for cabling information.

NOTE: To use HP Poly Studio A2 with a Poly Studio V12 system, connect a single HP Poly Studio A2 Table Mic device directly into the Poly Studio V12 system. You don't need a HP Poly Studio A2 Audio Bridge device. Only one HP Poly Studio A2 Table Mic device is supported for Poly Studio V12.

Figure 3-6 HP Poly Studio A2 with Poly Studio V Series video bar configuration

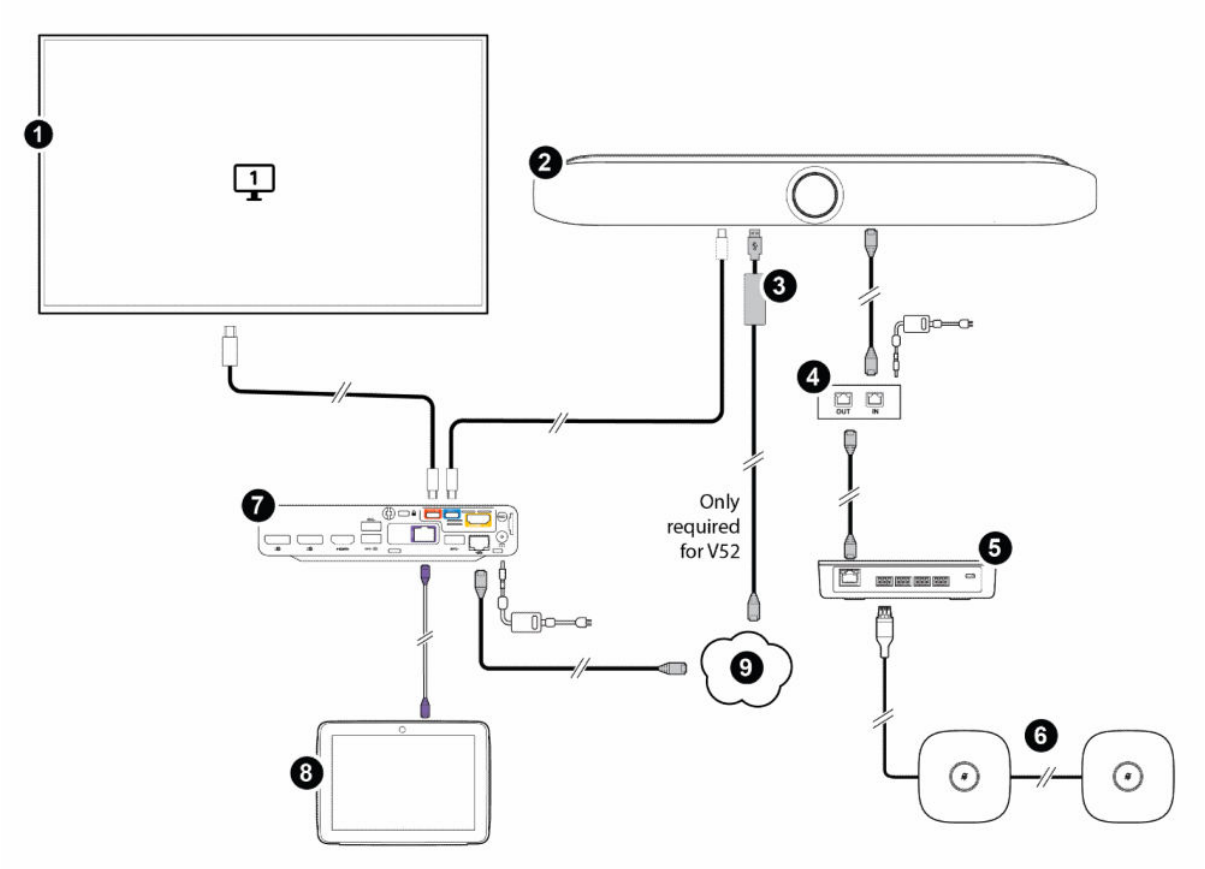

Table 3-9 Poly Studio V Series configuration hardware key

Item	Description
1	Display
2	Poly Video V Series video bar
3	USB Type-A to Ethernet adapter (for Poly Studio V52 only; connection to network optional for device management)
4	PoE Switch
5	HP Poly Studio A2 Audio Bridge device
6	HP Poly Studio A2 Table Mic devices
7	HP Mini IP Conference PC

Table 3-9 **Poly Studio V Series configuration hardware key (continued)**

Item	Description
8	Poly touch controller
9	LAN

Cabling HP Poly Studio A2 devices with Poly Studio G62

Connect HP Poly Studio A2 to a Poly Studio G62 system with a Poly Studio E70 camera for extra-large room coverage. Review the following diagram for cabling information.

Figure 3-7 **HP Poly Studio A2 with Poly Studio G62 configuration**

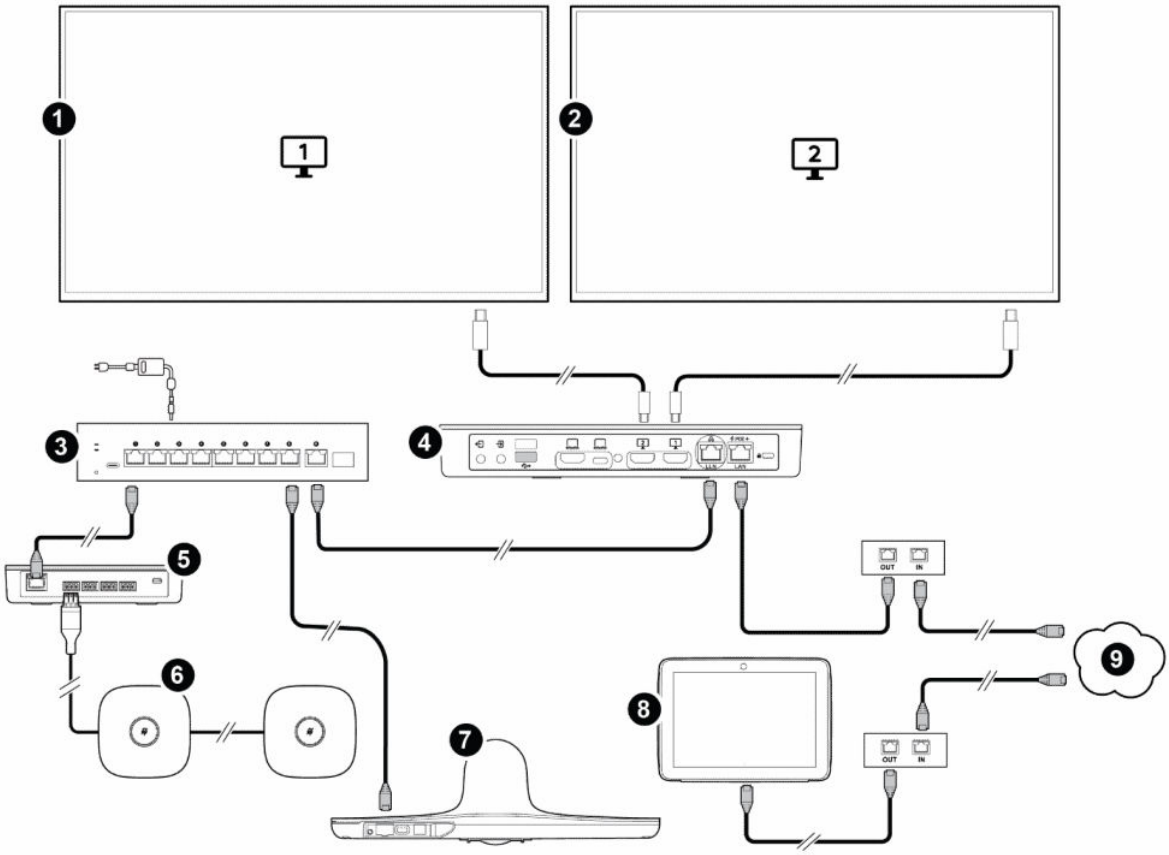

Table 3-10 **Poly Studio G62 configuration hardware key**

Item	Description
1	Display 1
2	Display 2
3	Netgear switch
4	Poly Studio G62
5	HP Poly Studio A2 Audio Bridge

Table 3-10 Poly Studio G62 configuration hardware key (continued)

Item	Description
6	HP Poly Studio A2 Table Mic devices
7	Poly Studio E70
8	Poly touch controller
9	LAN

NOTE: For information on supported Netgear switches, review the Poly VideoOS release notes.

Selectable PoE switch power classes

The following table outlines which PoE class to choose, depending on your conferencing space requirements.

Table 3-11 Selectable switch power classes (PoE, PoE+, PoE++)

PoE class	Source power	Device power	Audio bridge support (8 W)	Maximum table mics (2 W)
PoE + Type 2 Class 4	30 W	25.5 W	1	8
PoE++ Type 3 Class 5	45 W	40 W	1	8
PoE++ Type 3 Class 6	60 W	51 W	1	8
PoE++ Type 4 Class 8	90 W	71.3 W	1	8

Custom cabling with HP Poly Studio A2

HP recommends that you use the cables that come in the box with your HP Poly Studio A2 devices.

You can use your own cables to span longer distances, for example, across multiple tables or to aid in hiding cables under the ground or in plenum spaces, as long as you adhere to the following HP guidelines.

Custom cabling support and limitations

Adhere to the following guidelines when creating a custom cabling configuration.

Table 3-12 Supported custom cabling

Connection type	Span number	Cable length Typical	Cable length Maximum	Maximum number of connectors *	Cable type
Audio bridge to table microphone	1	6 meters (20 feet)	18 m (59 ft)	4	Shielded 22 AWG 1-pair stranded audio wire
Table microphone to table microphone	2 to 8	1.8, 8 meters (6, 26 feet)	18 m (59 ft)	6	Shielded 22 AWG 1-pair stranded audio wire
Poly Studio V12 to table microphone	1	6 meters (20 feet)	14 m (46 feet)	4	Shielded 22 AWG 1-pair stranded audio wire

*The input and output of a connection counts as two connectors.

IMPORTANT:

- The maximum supported total length between audio bridge and last table mic in series is 144 m (472 ft); the total maximum number of connectors is 46.
- Construct all custom cables using shielded 22 AWG 1-pair stranded audio wire.
- The cables must meet a characteristic impedance of 100 ohm.
- HP Poly recommends using a male phoenix connector type 1803581 and a female phoenix connector type 1857896.

The following figures indicate the wire colors of in-the-box cables and the industry standard colors that apply to custom cables.

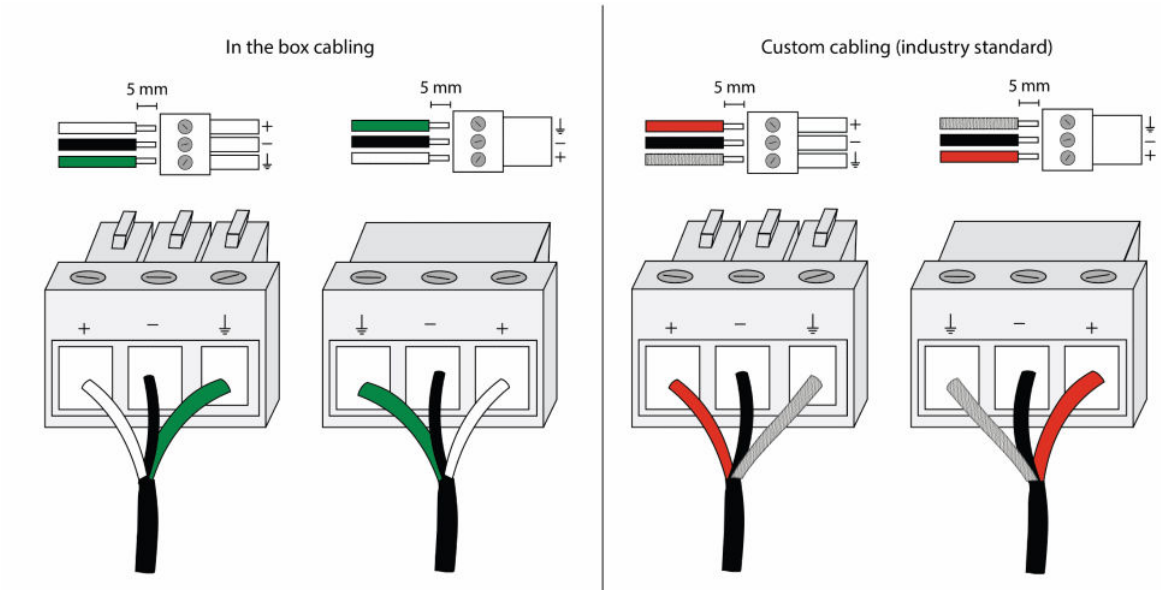

The following graphic shows an example of how you can hide cables in conduit in the legs of meeting room tables and under the floor for a discrete solution.

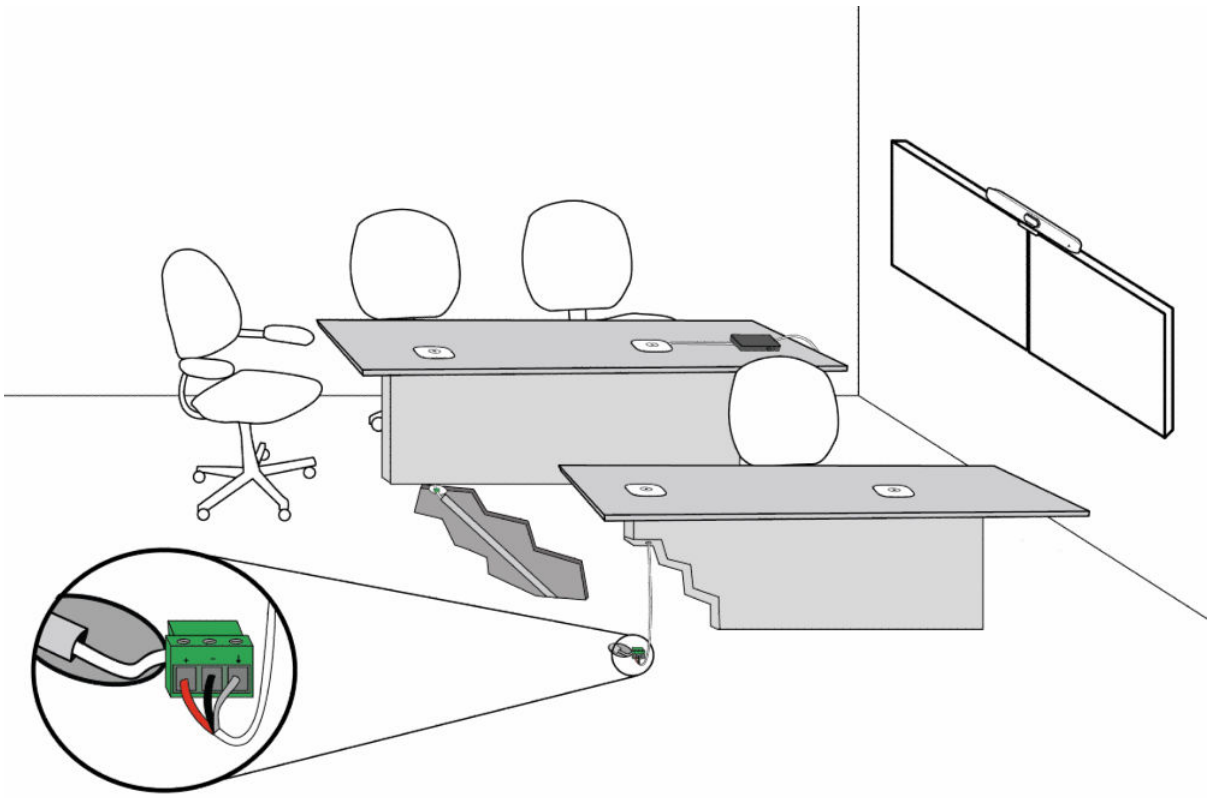

4 Configuring HP Poly Studio A2

When you connect an HP Poly Studio A2 Audio Bridge to a Poly video system, the Poly video system auto-detects the HP Poly Studio A2 Table Mic devices connected to the HP Poly Studio A2 Audio Bridge device.

Pair an HP Poly Studio A2 Audio Bridge device to a Poly video conferencing system

Pair an HP Poly Studio A2 Audio Bridge device to a Poly video conferencing system in the system web interface of the Poly video conferencing system.

1. In the system web interface of the Poly video conferencing system, go to **General Settings** > **Device Management**.
2. Under **Connected Devices**, find the HP Poly Studio A2 Audio Bridge device and select **Pair**.

   The HP Poly Studio A2 Audio Bridge device connects and an **Unpair** option displays.

View connected HP Poly Studio A2 devices

View the HP Poly Studio A2 devices that are connected to a Poly video system in the system web interface.

- Choose between the following options to view the connected HP Poly Studio A2 devices.
  - In the system web interface, go to **Audio/Video** > **Audio**. Select the **Audio Bridge** tab.
  - In the system web interface, go to **General Settings** > **Device Management**. Under **Connected Devices** expand the Studio A2 Audio Bridge to see the connected mics.

  A connected HP Poly Studio A2 Audio Bridge device displays, along with HP Poly Studio A2 Table Mic devices that are connected to it.

Identify a HP Poly Studio A2 Table Mic device

Identify the specific HP Poly Studio A2 Table Mic device that corresponds to each one listed in the **Audio Bridge** tab on the system web interface by using the amber LED indicator feature.

1. In the system web interface, go to **Audio/Video** > **Audio**.
2. Select the **Audio Bridge** tab.

3. For a listed HP Poly Studio A2 Table Mic device, select the light bulb icon.

   The LED indicator of the HP Poly Studio A2 Table Mic device that corresponds to the listed mic displays a solid amber light.

Enable Multi-Mic Mode

With Multi-Mic Mode enabled, the system captures audio from up to four microphones at the same time. Enable Multi-Mic Mode for large rooms with multiple participants.

Multi-Mic Mode is supported on any Poly Studio X72, Poly Studio X52, and Poly Studio G62 system that can support two or more Poly Studio A2 Table Microphones.

- In the system web interface, go to **Audio** > **General Audio** and select **Multi-Mic Mode**.

NOTE: When using a Poly Studio X52/X72 or Poly Studio V52/V72 and both Multi-Mic Mode and Auto Switching are enabled, the best microphone is selected between built-in and external microphones. The best microphone is then mixed with the remaining Poly Studio A2 Table Microphones.

When Auto Mic Switching is turned off and Multi-Mic Mode is on, the built-in microphones are ignored, and multiple Poly Studio A2 Table Microphones are mixed.

Enable NoiseBlockAI v2

Eliminate echoes heard on the far end due to room conditions and materials by enabling NoiseBlockAI v2.

1. In the system web interface, go to **Audio / Video** > **Audio** > **NoiseBlockAI v2**.
2. In the drop-down menu, select **NoiseBlockAI v2**.

5 Troubleshooting HP Poly Studio A2 devices

If you're having issues with your HP Poly Studio A2 devices, try the troubleshooting options and solutions in the following topics.

Locate the serial number on HP Poly Studio A2 devices

Find your device's serial number on the product label on the underside of your HP Poly Studio A2 device.

- On the underside of your HP Poly Studio A2 devices, in the middle panel, note the serial number

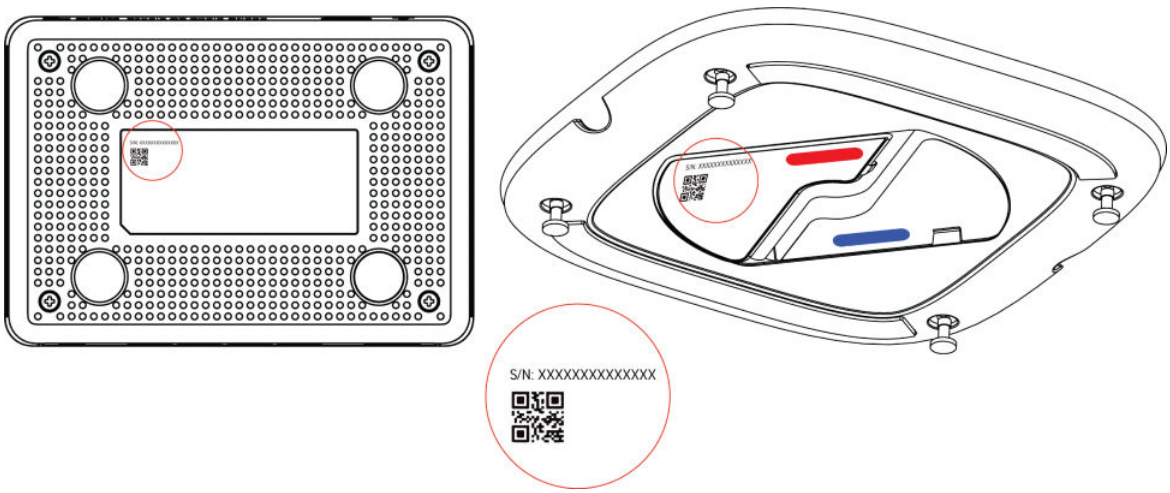

HP Poly Studio A2 Audio Bridge not pairing

If the Poly video system isn't detecting the HP Poly Studio A2 Audio Bridge device, reset the audio bridge.

1. To view the connection status of the HP Poly Studio A2 Audio Bridge, go to the system web interface of the connected Poly Video system.
2. Go to **Audio/Video** > **Audio** and select the **Audio Bridge** tab.
3. If the HP Poly Studio A2 Audio Bridge device isn't listed in the **Audio Bridge** tab, factory restore the audio bridge as described in Factory Restore the HP Poly Studio A2 Audio Bridge on page 30.

HP Poly Studio A2 Table Mic not pairing

If the HP Poly Studio A2 Table Mic device isn't working, reset the connected HP Poly Studio A2 Audio Bridge device.

Perform one of the following steps:

- In the system web interface, go to **Diagnostics** > **Reboot**.
- Unplug and reconnect the Ethernet cable.

HP Poly Studio A2 Audio Bridge LED is blinking red

If the HP Poly Studio A2 Audio Bridge LED blinks red, it is usually an indication that one or more of the mics aren't working or that the device isn't getting enough power. Occasionally, however, the LED blinks red if the device detects an error and recovers from it.

1. If the HP Poly Studio A2 Audio Bridge LED blinks red, wait for 2 minutes to see if it turns solid white before performing further troubleshooting steps.
2. If the LED continues to blink red, restore it as described in Factory Restore the HP Poly Studio A2 Audio Bridge on page 30

Factory Restore the HP Poly Studio A2 Audio Bridge

You may need to factory restore a HP Poly Studio A2 Audio Bridge to resolve issues, for example, pairing or connection issues.

1. Remove the CAT 6A cable.
2. Insert a pin or straightened paper clip through the factory restore button pinhole.
3. Press and continue to hold the restore button for more than 10 seconds after reconnecting the LAN cable to power up the device. The LED will begin breathing amber to indicate factory reset has begun.

   The factory reset takes approximately 2 minutes. When complete, HP Poly Studio A2 Audio Bridge reboots. The LED breathes white before becoming solid white indicating that the HP Poly Studio A2 Audio Bridge reboot is complete.

NOTE: After the LED becomes solid-white, always wait at least 40 seconds before removing power.

6 Getting help

Poly is now a part of HP. The joining of Poly and HP paves the way for us to create the hybrid work experiences of the future. Information about Poly products has transitioned from the Poly Support site to the HP Support site.

The Poly Documentation Library is continuing to host the installation, configuration/administration, and user guides for Poly products in HTML and PDF format. In addition, the Poly Documentation Library provides Poly customers with information about the transition of Poly content from Poly Support to HP Support.

The HP Community provides additional tips and solutions from other HP product users.

HP Inc. addresses

Contact HP at the following office locations.

HP US
HP Inc.
1501 Page Mill Road
Palo Alto, CA 94304
United States
Phone:+ 1 650-857-1501

HP Germany
HP Deutschland GmbH
HP HQ-TRE
71025 Boeblingen, Germany

HP Spain
HP Printing and Computing Solutions, S.L.U.
Cami de Can Graells 1-21 (Bldg BCN01)
Sant Cugat del Valles
Spain, 08174
902 02 70 20

HP UK
HP Inc UK Ltd
Regulatory Enquiries, Earley West
300 Thames Valley Park Drive
Reading, RG6 1PT
United Kingdom

Document information

Review the following document information.

Model ID: MN

Document part number: P84761-002A

Last update: December 2025

Email us at documentation.feedback@hp.com with queries or suggestions related to this document.