YAMAHA

SPEAKER SYSTEM

VXL1B-16P
VXL1W-16P

Owner's Manual	EN
Bedienungsanleitung	DE
Mode d'emploi	FR
Manual de instrucciones	ES
Manual do Proprietário	PT
Manuale di istruzioni	IT
Руководство пользователя	RU
사용설명서	KO
使用说明书	ZH
取扱説明書	JA

English
Deutsch
Français
Español
Português
Italiano
Русский
한국어
中文
日本語

FCC INFORMATION (U.S.A.)

1. IMPORTANT NOTICE: DO NOT MODIFY THIS UNIT!

This product, when installed as indicated in the instructions contained in this manual, meets FCC requirements. Modifications not expressly approved by Yamaha may void your authority, granted by the FCC, to use the product.

2. IMPORTANT: When connecting this product to accessories and/or another product use only high quality shielded cables. Cable/s supplied with this product MUST be used. Follow all installation instructions. Failure to follow instructions could void your FCC authorization to use this product in the USA.

3. NOTE: This product has been tested and found to comply with the requirements listed in FCC Regulations, Part 15 for Class "A" digital devices. Compliance with these requirements provides a reasonable level of assurance that your use of this product, in a commercial environment, will not result in harmful interference with other electronic devices. However, operation of this product in a residential area is likely to cause interference in some form. In this case you, the user, bear the responsibility of correcting this condition.

This product generates/uses radio frequencies and, if not installed and used according to the instructions found in the users manual, may cause interference harmful to the operation of other electronic devices. Compliance with FCC regulations does not guarantee that interference will not occur in all installations. If this product is found to be the source of interference, which can be determined by turning the product "OFF" and "ON", please try to eliminate the problem by using one of the following measures:

Relocate either the product generating the interference or the device that is being affected by the interference.

Utilize power outlets that are on different branch (circuit breaker or fuse) circuits or install AC line filter/s.

In the case of radio or TV interference, relocate/reorient the antenna. If the antenna lead-in is 300 ohm ribbon lead, change the lead-in to co-axial type cable.

If these corrective measures do not produce satisfactory results, please contact the local retailer that is authorized to distribute this type of product. If you can not locate the appropriate retailer, please contact Yamaha Corporation of America, Electronic Service Division, 6600 Orangethorpe Ave, Buena Park, CA90620

The above statements apply ONLY to those products distributed by Yamaha Corporation of America or its subsidiaries.

* This applies only to products distributed by Yamaha Corporation of America. (class A)

This device complies with Part 15 of the FCC Rules. Operation is subject to the following two conditions:
(1) this device may not cause harmful interference, and (2) this device must accept any interference received, including interference that may cause undesired operation.

CAN ICES-3 (A)/NMB-3(A)

(can_a_02)

A 급 기기 (업무용 방송통신기자재)
이 기기는 업무용 (A 급) 전자파적합기기로서 판매자 또는 사용자는 이 점을 주의하시기 바라며 , 가정외의 지역에서 사용하는 것을 목적으로 합니다 .

PRECAUTIONS

PLEASE READ CAREFULLY BEFORE PROCEEDING
Please keep this manual in a safe place for future reference.

⚠ *WARNING*

Always follow the basic precautions listed below to avoid the possibility of serious injury or even death from electrical shock, short-circuiting, damages, fire or other hazards. These precautions include, but are not limited to, the following:

If you notice any abnormality

- If any of the following problems occur, immediately turn off the PoE injector or the PoE network switch and disconnect the cable.
  - The LAN cable damaged.
  - Unusual smells or smoke are emitted.
  - Some object, or water has been dropped into the product.
  - There is a sudden loss of sound during use of the product.
  - Cracks or other visible damage appear on the product.

  Then have the product inspected or repaired by qualified Yamaha service personnel.

Location and connection

- Use a CAT5e or higher LAN cable to connect this product with a PoE injector or the PoE network switch. If you connect a cable that does not comply with specifications, or connect a flat type or slim type cable, fire or malfunctions might occur.
- Do not use the optional brackets for other speakers besides the ones specified. Doing so may cause an accident.
- Do not damage the LAN cable. Failure to observe this precaution could result in fire, electric shock, or damage to the product.
  - Do not place heavy objects on the cable.
  - Do not process the cable in any way.
  - Do not use staples to fix the cable in place.
  - Do not apply excessive force to the cable.
  - Be sure to keep the cable away from anything hot.

Do not open

- Do not disassemble or modify this device (painting excepted).

Water warning/Fire warning

- Do not place any burning items or open flames near the product, since they may cause a fire.

Hearing loss

- Before connecting the product to other devices, turn off the power for all devices. Also, before turning the power of all devices on or off, make sure that all volume levels are set to the minimum. Failing to do so may result in hearing loss, electric shock, or device damage.

⚠ *CAUTION*

Always follow the basic precautions listed below to avoid the possibility of physical injury to you or others, or damage to the product or other property. These precautions include, but are not limited to, the following:

Location and connection

- Do not place the product in an unstable position where it might accidentally fall over and cause injuries.
- Do not place the product in a location where it may come into contact with corrosive gases or salt air. Doing so may result in malfunction.
- Before moving the product, remove all connected cables.
- Be sure to contact a professional installer, if the speaker installation requires construction work, and make sure to observe the following precautions.
  - Choose mounting hardware and an installation location that can support the weight of the product.
  - Avoid locations that are exposed to constant vibration.
  - Use the required tools to install the product.
  - Inspect the product periodically.
- When transporting this product, take care not to drop it. Dropping this product may cause it to be damaged, or may cause personal injury.
- Do not route cables where someone might trip over them, such as in a location where people pass. Tripping on a cable may cause a person or this product to fall down, resulting in personal injury or damage to the product.

Handling caution

- Do not hang heavy objects from this device.
- Avoid applying excessive force to the switches or connectors to prevent injuries.

Yamaha cannot be held responsible for damage caused by improper use or modifications to the product, or data that is lost or destroyed.

PA_en_9 2/2

NOTICE

To avoid the possibility of malfunction/ damage to the product, damage to data, or damage to other property, follow the notices below.

Handling and maintenance

Do not use the product in the vicinity of a TV, radio, AV equipment, mobile phone, or other electric products. Otherwise, the product, TV, or radio may generate noise.

Do not expose the product to excessive dust or vibration, or extreme cold or heat (such as in direct sunlight, near a heater, or in a car during the day), in order to prevent the possibility of panel disfiguration, unstable operation, or damage to the internal components.

Condensation can occur in the product due to rapid, drastic changes in ambient temperature—when the product is moved from one location to another, or air conditioning is turned on or off, for example. Using the product while condensation is present can cause damage. If there is reason to believe that condensation might have occurred, leave the product for several hours without turning on the power until the condensation has completely dried out.

When placing the speaker face down, always place it on a flat surface.

Do not touch the speaker driver unit.

Air blowing out of the bass reflex ports is normal, and often occurs when the speaker is handling program material with heavy bass content.

Do not place vinyl, plastic or rubber objects on the product, since this might discolor the panel.

When cleaning the product, use a dry and soft cloth. Do not use paint thinners, solvents, cleaning fluids, or chemical-impregnated wiping cloths.

Do not use a LAN cable of a form that would place undue strain on the connector when connected to this product.

Information

This is a class A product. Operation of this product in a residential environment could cause radio interference.

To prevent electromagnetic interference, use STP (Shielded Twisted Pair) cable.

About this manual

The illustrations as shown in this manual are for instructional purposes only.

Apple, the Apple logo, and iPad are registered trademarks of Apple Inc. in the United States and in other countries.

The company names and product names in this manual are the trademarks or registered trademarks of their respective companies.

About disposal

This product contains recyclable components.

When disposing of this product, please contact the appropriate local authorities.

For details on the open source license of Dante's Ultimo, refer to the website of the Audinate Corporation.

https://www.audinate.com/software-licensing

The model number, serial number, power requirements, etc., may be found on or near the name plate, which is at the rear of the unit. You should note this serial number in the space provided below and retain this manual as a permanent record of your purchase to aid identification in the event of theft.

Model No. _____

Serial No. _____

(rear_en_01)

Contents

PRECAUTIONS....3
NOTICE....4
Information....4
Introduction....6
What you'll need....6
About the software....6
Using the PDF manuals....6
Included accessories....7
Optional accessories....7
Controls and Connectors....8
Front panel/Rear panel....8
Setting method....9
Installing the speakers....11
Initialization....14
Painting....15
Painting the grille....15
Painting the speaker enclosure....16
Attaching the horizontal coupling bracket (HCB-L1B)....17
Attaching the wall mount bracket (WMB-L1)....18
General specifications....21
Dimensions....208
Block Diagram....209

Introduction

Thank you for purchasing the Yamaha VXL1B-16P or VXL1W-16P speaker system.

This product is a speaker system used for amplifying sound in conference rooms and similar spaces. It allows the speaker system to be networked via a Dante network and PoE (Power over Ethernet). This owner's manual provides instructions for planning, installing, and setting up the system. Be sure to read this owner's manual before installation. Also, keep this guide in a safe place for reference after you have finished reading it.

What you'll need

- **PoE injector or PoE network switch that complies with IEEE802.3at(PoE+) or IEEE802.3af**

This is used between this unit and a Dante device such as the MRX7-D in order to supply power to this unit.
PoE injectors or PoE network switches are collectively referred to as "PSE (Power Sourcing Equipment)."

- **Ethernet cable (CAT5e or higher)**

This is used between the Dante device such as the MRX7-D and the PSE, and between the PSE and this unit.

About the software

ProVisionaire Touch
ProVisionaire Touch is an application for remotely controlling this product from a tablet (iPad) via a Wi-Fi network.

Dante Controller
Dante Controller is application software for setting up a Dante network and specifying audio routing.
This product is supported by Dante Controller V3.2.x and later.
The computer on which Dante Controller is installed must be equipped with an Ethernet port that supports gigabit Ethernet.
For information about this software, refer to the Yamaha Pro Audio website.
https://www.yamaha.com/proaudio/
For details on how to download and install the software, and on detailed settings, refer to the above website and to the installation guide that is included with the downloaded program.

Using the PDF manuals

Each user guide is an electronic file in PDF format. These files can be viewed on your computer. If you use "Adobe® Reader®" as the viewing software on your computer, you'll be able to quickly search for terms, print specific sections that you need, or click links to open the corresponding section. Searching for terms and following links are particularly convenient functions that are possible only with an electronic file. We encourage you to take advantage of such functions.
The latest version of Adobe Reader can be downloaded from the following website.
http://www.adobe.com/

Included accessories

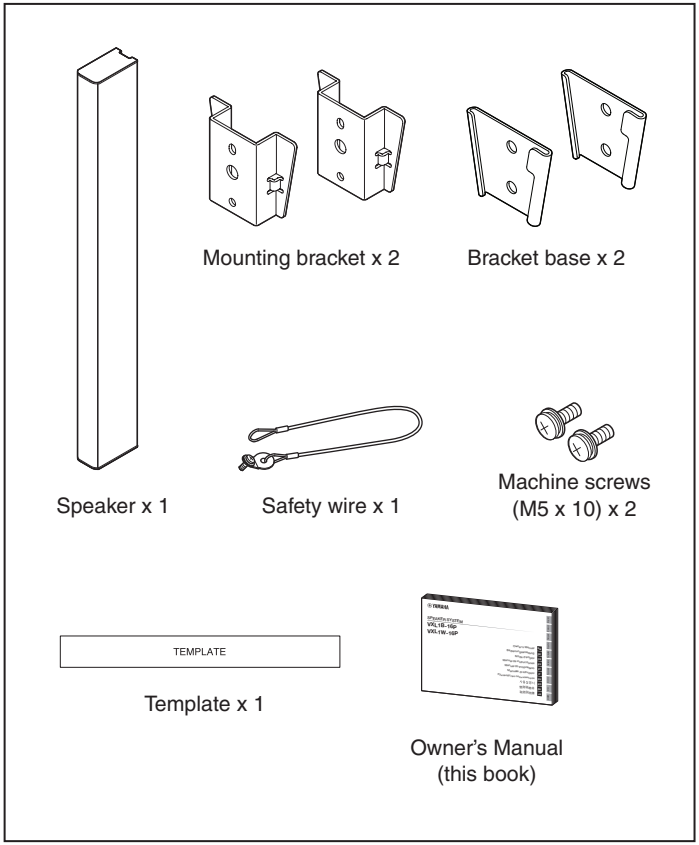

Optional accessories

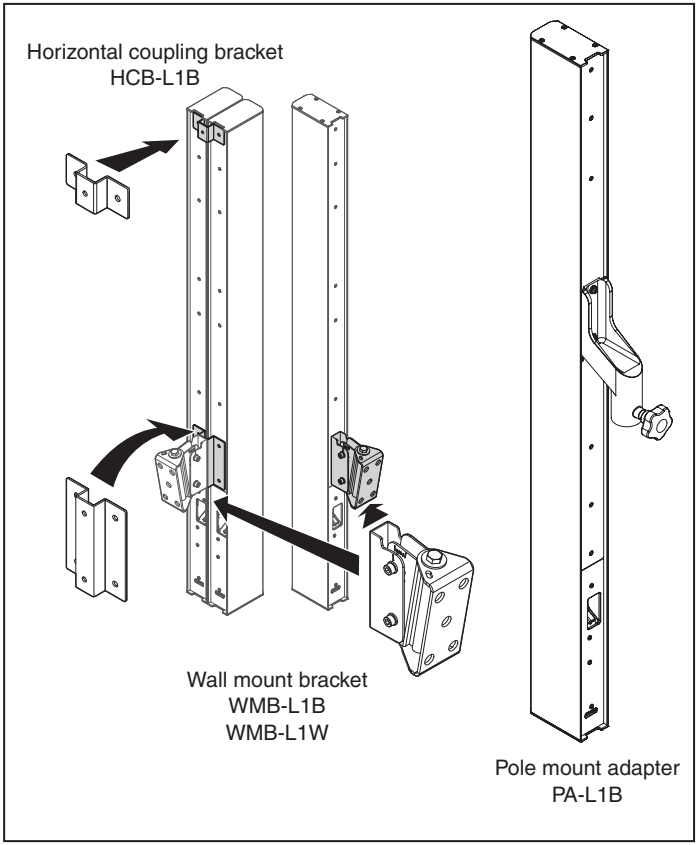

Controls and Connectors

Front panel

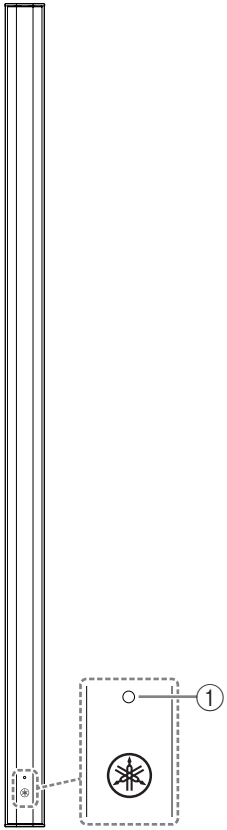

Rear panel

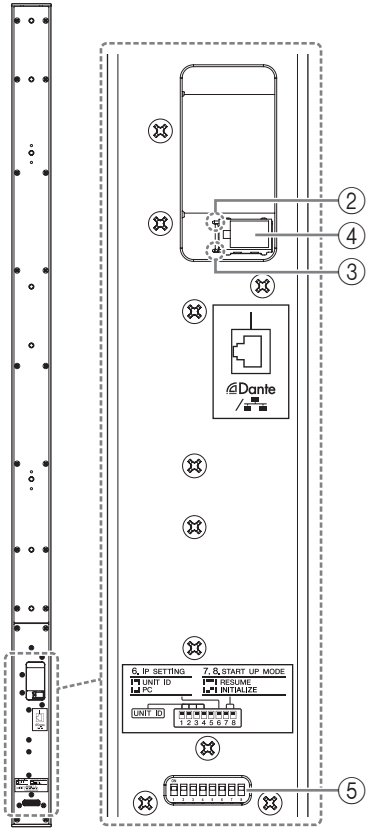

① **Power indicator**
Lit green when power is being supplied correctly. This goes dark approximately 30 seconds after startup. During initialization, it flashes rapidly. It flashes when you execute the identification function from a controlling device.

② **SYNC indicator**
Indicates the operating status of the Dante network.
If the green indicator is lit, this indicates that the device is a clock slave and is synchronized to the clock.
If the green indicator is flashing, this indicates that the device is the clock master. If the orange indicator is flashing at regular intervals, the word clock setting within the Dante network is incorrect.
Use Dante Controller to set the clock master and the sampling frequency correctly.

③ **LINK/ACT indicator**
Indicates the communication status of the Dante/NETWORK port.
This flashes rapidly if the Ethernet cable is connected correctly.

④ **Dante/NETWORK port**
An RJ45 port for connection via an Ethernet cable (CAT5e or higher) to a Dante device such as the MRX7-D, through a PSE (Power Sourcing Equipment) unit.

- Do not connect this port to anything other than a Dante-enabled device or a gigabit Ethernet device (including a computer).
- The maximum length of cable that can be used is 100 meters.
- To prevent electromagnetic interference, use STP (Shielded Twisted Pair) cable.

⑤ **Device settings DIP switches**
Specify startup settings for the device. A label explaining these settings is affixed to the rear panel.

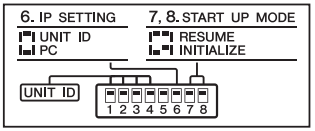

Setting method

Turn off the power of the PSE (Power Sourcing Equipment) before you change these settings. Even if you change these settings while the power is on, the change is not applied until the power is turned off.

For details, refer to the following.

DIP switch	
Position	The DIP switch is in the upward position

DIP switch	
Position	The DIP switch is in the downward position

DIP switches 1–4 (UNIT ID)

These specify the UNIT ID of the device. The UNIT ID is assigned as the value specified by DIP switches 1–4 plus 100, producing a value in the range of 101–115 (Hexadecimal 65–73). In the table below, “up” and “down” indicate whether the DIP switch is in the upward or downward position.

UNIT ID	DIP switch			
	1	2	3	4
101	down	up	up	up
102	up	down	up	up
103	down	down	up	up
104	up	up	down	up
105	down	up	down	up
106	up	down	down	up
107	down	down	down	up
108	up	up	up	down
109	down	up	up	down
110	up	down	up	down
111	down	down	up	down
112	up	up	down	down
113	down	up	down	down
114	up	down	down	down
115	down	down	down	down
RESERVED	up	up	up	up

NOTE

If you are connecting multiple VXL1B-16P or VXL1W-16P units in the same network, set the UNIT ID so that the settings do not overlap.

DIP switch 5

Not used. Leave this at the factory setting (upward).

DIP switch 6 (IP SETTING)

Specifies how the IP address used for communication with external devices is set.

DIP switch	6
Setting	UNIT ID
Content	The IP address is specified by the UNIT ID as “192.168.0.(UNIT ID).”

DIP switch	6
Setting	PC
Content	If a DHCP server exists, the IP address is specified by the DHCP server. If a DHCP server does not exist, the IP address is specified by the link local address.

NOTE

With the factory settings this is set to UNIT ID.

DIP switches 7 and 8 (START UP MODE)

Specify the startup mode.

DIP switch	7 8
Setting	RESUME
Content	The normal operating mode. When the power turns on, the unit starts up and maintains the state in which it was immediately prior to power-off.

DIP switch	7 8
Setting	INITIALIZE
Content	Initializes the unit, returning it to the factory-set state (page 14).

Installing the speakers

You can use the included mounting bracket to install the speaker on a wall. Before installation, make sure the installation area can support the weight of the speaker. Do not install on wallboard or similar materials.

CAUTION

Do not install the speakers horizontally, as the speakers may fall.

1 Attaching the bracket base to the wall

1-1 Place the included template on the wall, to decide where the holes should go for the screws and cables.

1-2 Make holes in the wall for the cables, and pull the cables from the PSE (Power Sourcing Equipment) through the holes.

1-3 Install the bracket base onto the wall. Position the narrow part of the bracket base downward (towards the floor). The bracket base holes should be 5.3 mm in size.

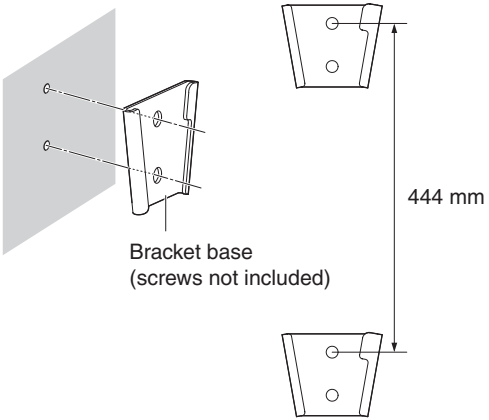

2 Installing the mounting bracket and safety wire onto the speakers

2-1 Install the mounting bracket onto the speaker using the included screws (M5×10). Install both the upper and lower mounting brackets at the position of the third hole. Install the safety wire at the topmost hole position.

CAUTION

- Use the included safety wire.
- If the included safety wire is not long enough, consider the weight of the speaker and the installation conditions, and procure an appropriate safety wire.

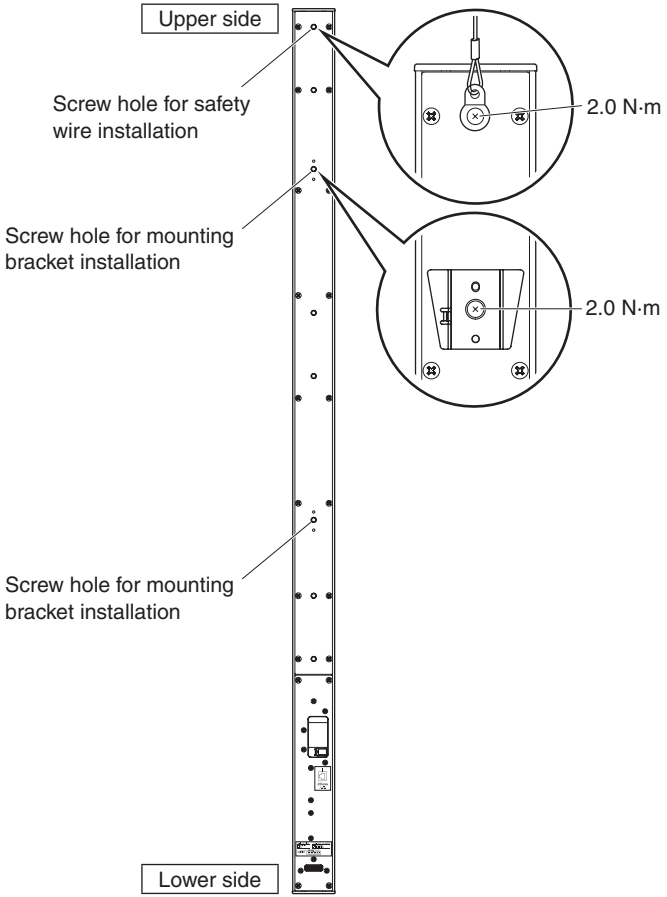

3 Set the device setting DIP switches

3-1 On the rear panel, set the device setting DIP switches (page 9) as appropriate for your installation.

NOTE

If you are connecting multiple VXL1B-16P or VXL1W-16P units in the same network, set the UNIT ID so that the settings do not overlap.

4 Connect to the Dante/NETWORK port

4-1 Connect an Ethernet cable (CAT5e or higher) from the PSE (Power Sourcing Equipment) to the Dante/NETWORK port.

NOTE

Connect the Ethernet cable to the LAN port of the PSE (Power Sourcing Equipment).

5 Attach the safety wire to the wall

CAUTION

Attach the safety wire above the speaker, and do not allow it to be slack.

6 Installing the main speaker unit onto the wall

6-1 Fit the bracket base together with the mounting bracket by inserting from the top, making sure to insert the mounting bracket all the way until the parts lock together.

NOTICE

- When installing the speaker, grasp it in the middle by its sides.
- Make sure that the mounting base and mounting bracket are locked together in two places, top and bottom.

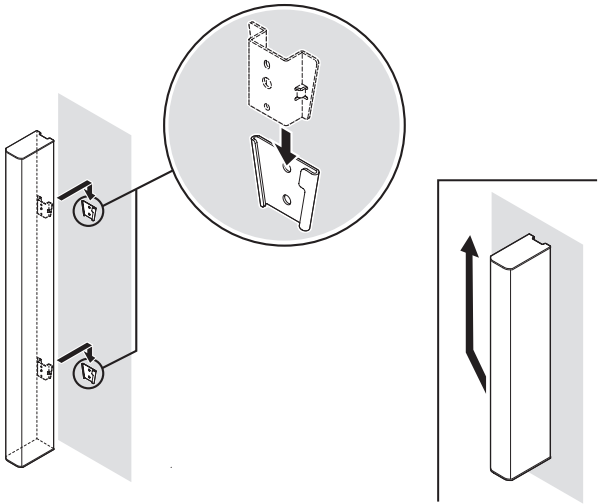

When removing, pick up the entire speaker while lightly pushing to the left.

7 Make patch settings from Dante Controller

For details, refer to the Dante Controller user guide.

8 Power-on the PSE

Initialization

If you want to return (initialize) the internal memory to its factory-set state, such as after changing the location of installation, proceed as follows.

1 Turn off the PSE (Power Sourcing Equipment).

2 On the rear panel, set device setting DIP switch 7 downward and switch 8 upward (INITIALIZE).

3 Power-on the PSE.

Initialization begins.

- During initialization:
  The POWER indicator flashes rapidly.
- When initialization is complete:
  The POWER indicator flashes slowly.
- If initialization fails:
  The POWER indicator is unlit.

NOTICE

Do not power-off the PSE while initialization is in progress. This could cause malfunctions.

4 Verify that initialization is complete, and power-off the PSE.

5 Set device setting DIP switches 7 and 8 both in the upward (RESUME) position.

6 Power-on the PSE.

The unit starts in the factory-set state.

Painting

We recommend that you paint this product using acrylic lacquer.

WARNING

Do not disassemble or modify this product (painting excepted).
This could cause electrocution, fire, injury, or malfunctions.

CAUTION

- Provide adequate ventilation while performing this work.
- When removing or attaching the grille, take care to avoid injury.

NOTICE

- When using volatile solvents, be careful of fire. Failure to take care might cause fire or accidents.
- Damage caused by painting the speaker is not covered by the warranty.

Painting the grille

1 Remove four screws each from the top and bottom panels of the speaker, and remove the top and bottom panels.

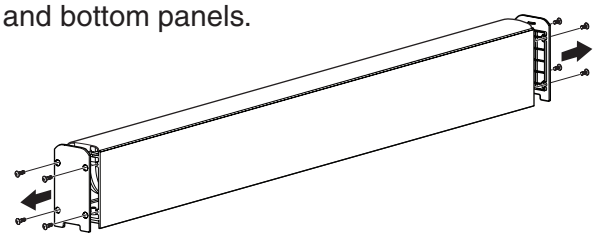

2 Taking care not to scratch the grille, slowly detach it from the speaker.

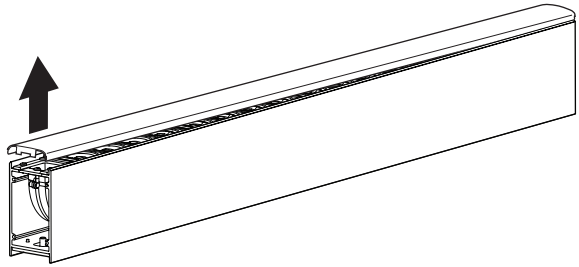

CAUTION

When detaching the grille, wear gloves to avoid injuring your hand on the edge of the grille.

3 Remove the emblem from the surface of the grille.
The emblem is fastened with adhesive tape.

4 Before painting, remove any dust or dirt from the grille.
Do not use sandpaper.

5 Use spray paint to paint the grille.

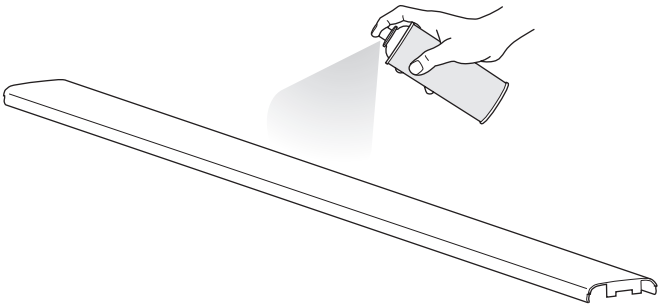

NOTE

Make sure the holes in the grille do not become clogged with paint. If the holes become clogged with paint, sound quality may be affected.

6 When the paint is completely dry, attach the emblem to the grille.

Painting the speaker enclosure

1 Before painting, remove any dust or dirt from the enclosure.

Do not use sandpaper.

2 Use spray paint to paint the enclosure.

Cover the speaker unit, baffle, and connectors using masking materials to avoid paint contact.

3 Allow the paint to dry completely.

4 After painting the speaker enclosure, top plate, and bottom plate, reattach the grille to the speaker.

To do so, align the grille with the edge of the speaker and fit it into place.

5 Fasten the top panel and bottom panel using the screws that you removed.

Attaching the horizontal coupling bracket (HCB-L1B)

CAUTION

Do not attach the HCB-L1B horizontal coupling bracket to any product other than a VXL1 series speaker system unit.

1 Use the included screws to attach the bracket to the speaker.

If you are using this in conjunction with the wall mount bracket (WMB-L1), attach the horizontal coupling bracket (S) to the first hole from the top, and attach the horizontal coupling bracket (L) to the 7th and 8th holes from the top.
If you are using this in conjunction with the pole mount adapter (PA-L1B), attach the horizontal coupling bracket (S) to the first hole from the top, and attach the horizontal coupling bracket (L) to the 4th and 5th holes from the top.

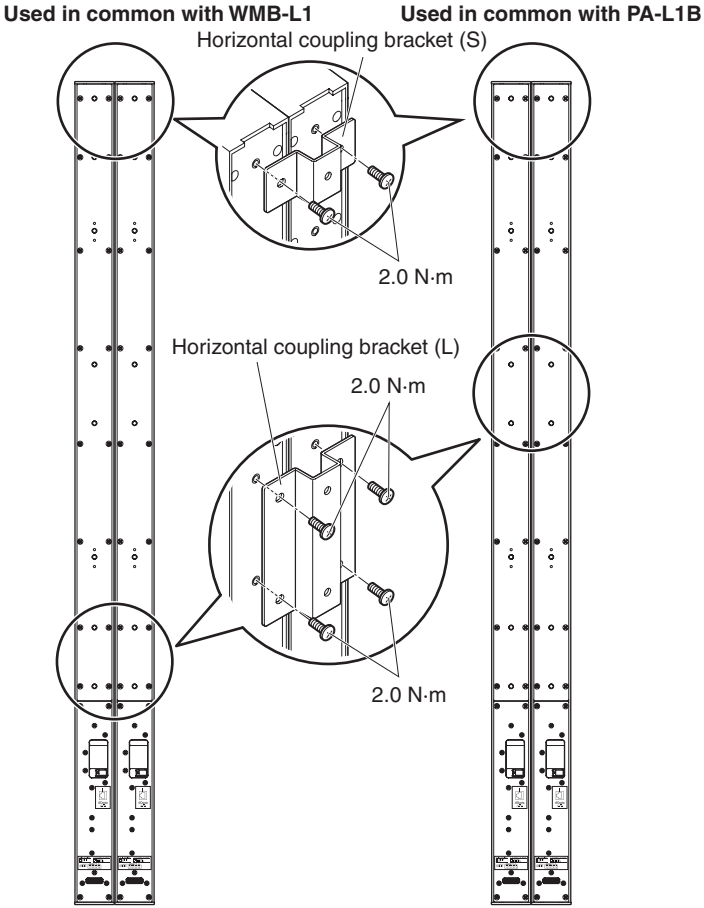

Attaching the wall mount bracket (WMB-L1)

1 Remove the pre-installed screws from the wall mount bracket (WMB-L1).

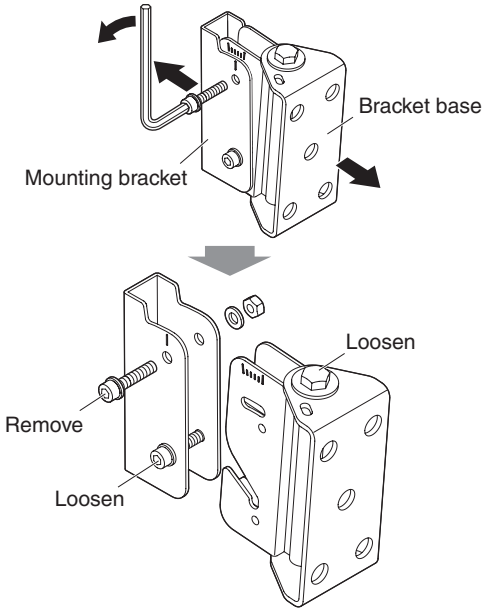

2 Place the template against the wall, and determine the location of the holes you'll use to attach the bracket base.

3 Install the bracket base onto the wall.

The bracket base holes are 12 mm in diameter.

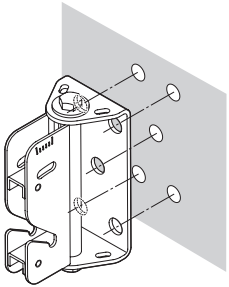

4 Attach the mounting bracket and safety wire to the speakers.

Attach the mounting bracket using the included screws.
For the position at which to attach the mounting bracket and safety wire, refer to the following illustration.

CAUTION

Attach the safety wire above the speaker, and do not allow it to be slack.

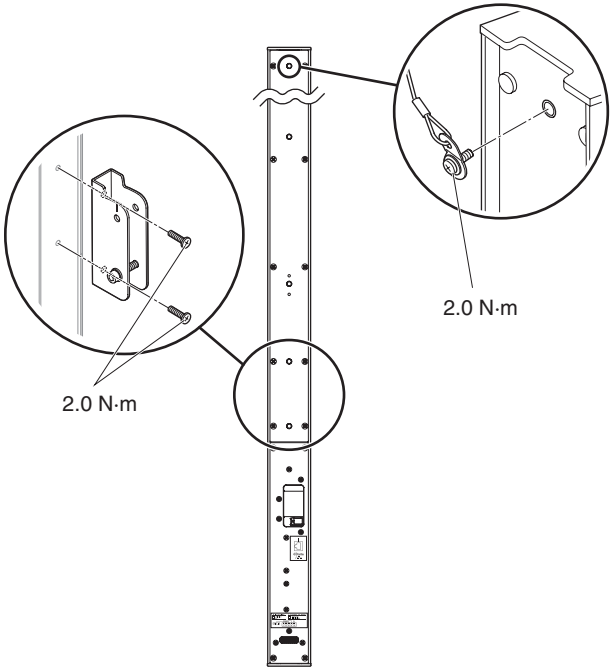

5 Connect an Ethernet cable (CAT5e or higher) from the PSE (Power Sourcing Equipment) to the Dante/NETWORK port.

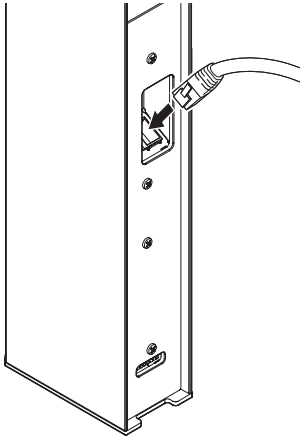

6 Insert the mounting bracket from above into the bracket base so that they fit together.

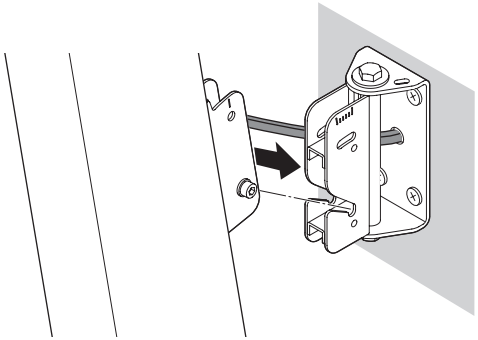

7 With the mounting bracket tightly fitted into the bracket base, provisionally secure the speaker using the angle adjustment bolt that you removed earlier.

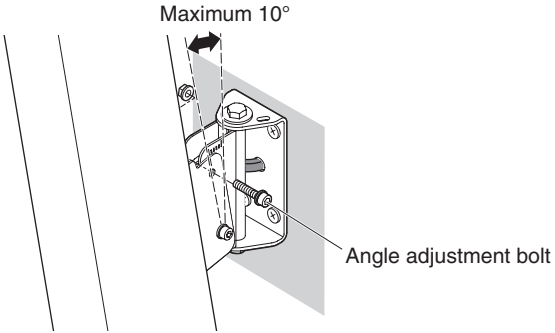

8 Specify the vertical dispersion angle. Use the included hex wrench to securely tighten the two angle adjustment bolts.

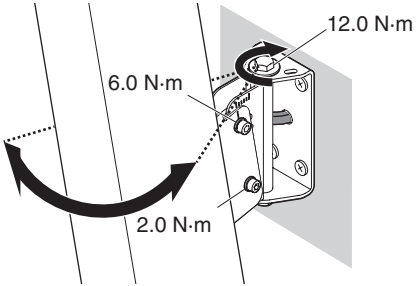

NOTE

The guide stamped into the bracket base is in 2° increments.

9 Specify the horizontal dispersion angle. Securely tighten the screw located above the bracket base to set the desired dispersion angle.

General specifications

General		
System type		Full-range, powered speaker, bass reflex
Frequency range (–10 dB) *1		80 Hz - 20 kHz
Coverage (–6dB)		Horizontal: 170° Vertical: 25° (+12.5° - –12.5°)
Effective coverage (–10dB)		Horizontal: 180° Vertical: 30° (+15° - –15°)
Maximum SPL (peak) *2 IEC noise@1m		102 dB SPL (when using PoE+ (IEEE 802.3 at))
Transducer		
Component		1.5" (3.75 cm) Cone ×16
Enclosure		
Enclosure	Cabinet material	Aluminum extrusion cabinet
	Top/Bottom board material	ABS (UL94-5VB)
Metal grille		Perforated aluminum (t=1.0mm) Aperture ratio: 55%
Finish		VXL1B-16P: Black painting (approximate value: Munsell N3.0) VXL1W-16P: White painting (approximate value: Munsell N9.0)
Magnetically shielded		No
Dust and water resistance		No

*1: Half space (2 π)
*2: Measured at 2 m; value converted to 1 m is shown (frequency range: 100 Hz – 10 kHz)

Dimensions (W × H × D)		Speaker only: 54 × 1120 × 104 mm With included bracket: 54 × 1120 × 111.5 mm
Net weight		5.0 kg
Amplifier		
Amplifier type		Class-D
Power rating	Dynamic	15W (PoE+ (IEEE 802.3 at)), 6W (PoE (IEEE 802.3 af))
	Continuous	15W (PoE+ (IEEE 802.3 at)), 6W (PoE (IEEE 802.3 af))
Cooling		Natural convection
Protection	Speaker processing	Clip limiting, Integral power protection
	Amplifier	Over current protection, Over temperature protection, Under voltage lock out, DC detection, Clock detection
	Power supply	Over load protection, Over voltage protection, Under voltage lock out
Connector		RJ-45 (Dante) ×1
Idle power consumption		3W
1/8 power consumption (Pink Noise)		6W (PoE+ (IEEE 802.3at)), 4.3W (PoE (IEEE 802.3af))
Power requiirements		PoE+ (IEEE 802.3at), PoE (IEEE 802.3af)
Included accessories		Mounting bracket ×2, Bracket base ×2, Safety wire ×1, Machine screw (M5 × 10) ×2, Template ×1, Owner's manual

The contents of this manual apply to the latest specifications as of the publishing date.
To obtain the latest manual, access the Yamaha website then download the manual file.

Dimensions

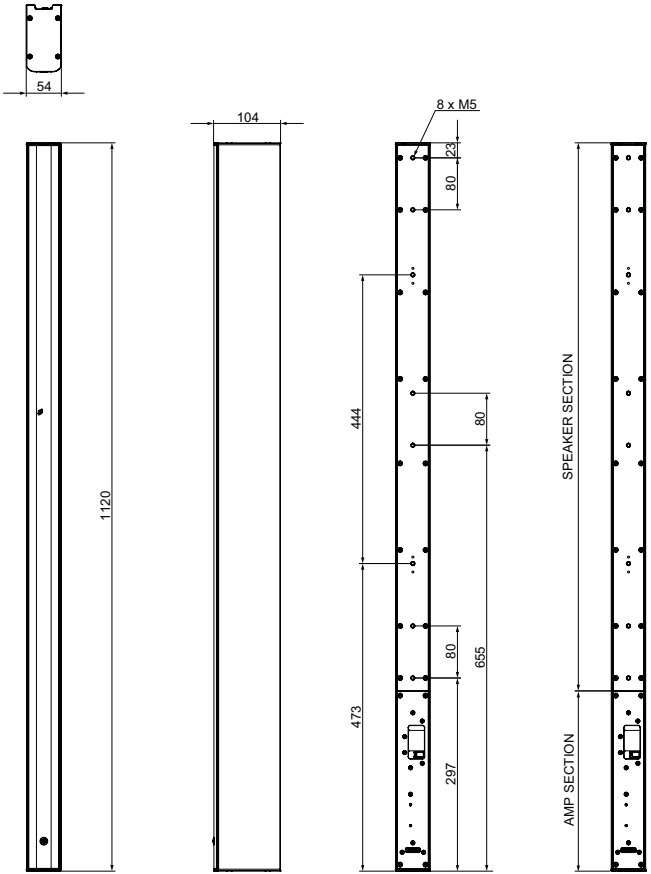

Mounting bracket

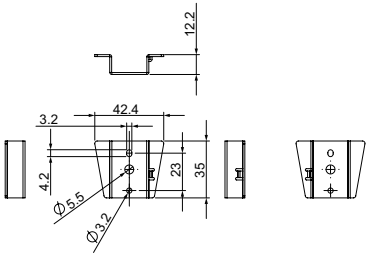

Bracket base

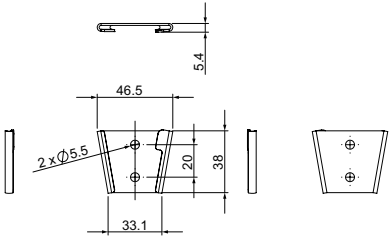

Unit : mm

Block Diagram

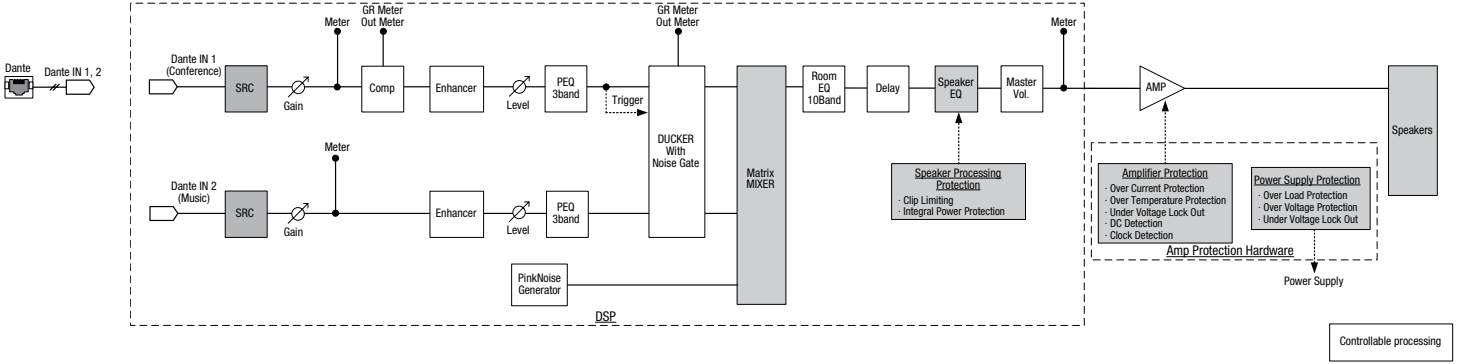

EN

About Using BSD-Licensed Software

The software used by this product includes components that comply with the BSD license.
The restrictions placed on users of software released under a typical BSD license are that if they redistribute such software in any form, with or without modification, they must include in the redistribution (1) a disclaimer of liability, (2) the original copyright notice and (3) a list of licensing provisions.
The following contents are displayed based on the licensing conditions described above, and do not govern your use of the product.

DE

Über die Verwendung BSD-lizensierter Software

Die von diesem Produkt verwendete Software enthält Komponenten, die mit der BSD-Lizenz übereinstimmen.
Die Einschränkungen, die Anwendern von Software unter einer üblichen BSD-Lizenz auferlegt werden, bestehen darin, dass sie bei Weiterverbreitung solcher Software in jeglicher Form, mit oder ohne Modifikationen, (1) dieser einen Haftungsausschluss, (2) den originalen Urheberrechtsvermerk und (3) eine Liste der Lizenzierungsgebühren beifügen müssen.
Die folgenden Inhalte werden auf Grundlage der oben beschriebenen Lizenzierungsbedingungen angegeben und regeln nicht Ihre Verwendung des Produkts.

FR

À propos de l'utilisation du logiciel sous licence BSD

Le logiciel utilisé par ce produit comprend des composants conformes aux termes de la licence BSD.
Les restrictions imposées aux utilisateurs du logiciel publié sous la licence BSD typique stipulent, pour les utilisateurs qui distribuent le logiciel sous quelque forme que ce soit, avec ou sans modification, l'exigence d'inclure au titre de la redistribution : (1) un désistement de responsabilité ; (2) la mention relative aux droits d'auteur originale ; et (3) une liste de dispositions en matière d'octroi de licence.
Les contenus suivants sont affichés sur la base des conditions d'octroi de licence décrites ci-dessus, et ne régissent en aucun cas l'utilisation que vous faites du produit.

ES

Información sobre el uso de software con licencia BSD

El software que se utiliza en este producto incluye componentes que cumplen con la licencia BSD.
Las restricciones que son de aplicación a los usuarios del software suministrado con una licencia BSD típica exigen que, en caso de cualquier tipo de redistribución de dicho software, con o sin modificaciones, se incluya en la redistribución: (1) una exención de responsabilidades; (2) el aviso de derechos de autor (copyright) original; y (3) una lista de cláusulas de la licencia.
El contenido siguiente se muestra de conformidad con las condiciones de licencia descritas anteriormente y no rigen el uso del producto por parte de usted.

PT

Sobre o uso do software licenciado BSD

O software usado por esse produto inclui componentes que estão em conformidade com a licença do BSD.
As restrições impostas a usuários do software distribuído sob uma típica licença BSD estabelecem que se eles redistribuírem tal software, sob qualquer forma, com ou sem modificações, deverão incluir (1) uma declaração de isenção de responsabilidade na redistribuição, (2) o aviso de direitos autorais original e (3) uma lista das cláusulas de licenciamento.
O sumário a seguir será exibido com base nas condições de licenciamento descritas acima mas não regem seu uso do produto.

IT

Informazioni sull'uso del software concesso in licenza da BSD

Il software utilizzato da questo prodotto include componenti conformi alla licenza BSD.
Gli utenti del software rilasciato con una licenza tipica BSD sono soggetti a limitazioni, ad esempio se ridistribuiscono tale software in qualsiasi forma, con o senza modifiche, devono includere nella ridistribuzione (1) una dichiarazione di non responsabilità, (2) l'avviso di copyright originale e (3) un elenco di disposizioni in materia di licenze.
I contenuti di seguito vengono visualizzati in base alle condizioni di licenza sopra elencate e non regolamentano l'utilizzo del prodotto.

RU

Об использовании лицензионного программного обеспечения BSD

Программное обеспечение, используемое в данном устройстве, включает компоненты, соответствующие требованиям Программной лицензии университета Беркли (BSD).
Ограничения, налагаемые на пользователей программного обеспечения, выпускаемого под лицензией BSD, включают следующее: если пользователи распространяют подобное программное обеспечение в любом виде, в том числе без изменений, они должны включить в пакет: 1) отказ от принятия на себя ответственности; 2) оригинал уведомления об авторских правах; и 3) список положений о лицензировании.
Эти положения основаны на вышеизложенных условиях лицензирования и не касаются использования продукта вами.

KO

BSD 라이선스가 적용된 소프트웨어의 사용에 관한 설명

본 제품에 사용된 소프트웨어에는 BSD 라이선스를 준수하는 컴포넌트가 포함되어 있습니다.
일반적인 BSD 라이선스 하에 출시된 소프트웨어를 어떠한 형태로든 재배포할 경우 배포자는 소프트웨어 수정 여부와 상관없이 (1) 책임 면책 조항, (2) 원 저작권 고지 및 (3) 라이선스 규정 목록을 반드시 포함시켜야 합니다. 다음 내용은 위에 설명된 라이선스 조건을 기준으로 표시되었으며 제품 사용에는 영향을 미치지 않습니다.

ZH

关于使用 BSD 认证的软件

本产品包括组件使用的软件均符合BSD许可。
在典型的BSD许可下发布软件的用户，有如下限制：如果用户以任何形式重新发布软件，无论修改与否，需要包含(1)免责声明，(2)原版的版权信息和(3)规定许可的清单。
基于上述许可条件的如下显示内容不影响您对产品的使用。

JA

BSDライセンスソフトウェアの利用に関するお知らせ

本製品はソフトウェアの一部にBSDライセンスに従ったソフトウェアを利用しています。
BSDライセンスとは、無保証の旨の明記、著作権表示、ライセンス条文一覧の表示を条件としてプログラムの再頒布が許諾されるソフトウェアのライセンス形式です。次の内容は、上記ライセンス条件にもとづき表示されるものであり、お客様の使用制限等を規定するものではありません。

lwIP is licenced under the BSD licence:
Copyright (c) 2001-2004 Swedish Institute of Computer Science.
All rights reserved.

Redistribution and use in source and binary forms, with or without modification, are permitted provided that the following conditions are met:

1. Redistributions of source code must retain the above copyright notice, this list of conditions and the following disclaimer.
2. Redistributions in binary form must reproduce the above copyright notice, this list of conditions and the following disclaimer in the documentation and/or other materials provided with the distribution.
3. The name of the author may not be used to endorse or promote products derived from this software without specific prior written permission.

THIS SOFTWARE IS PROVIDED BY THE AUTHOR “AS IS” AND ANY EXPRESS OR IMPLIED WARRANTIES, INCLUDING, BUT NOT LIMITED TO, THE IMPLIED WARRANTIES OF MERCHANTABILITY AND FITNESS FOR A PARTICULAR PURPOSE ARE DISCLAIMED. IN NO EVENT SHALL THE AUTHOR BE LIABLE FOR ANY DIRECT, INDIRECT, INCIDENTAL, SPECIAL, EXEMPLARY, OR CONSEQUENTIAL DAMAGES (INCLUDING, BUT NOT LIMITED TO, PROCUREMENT OF SUBSTITUTE GOODS OR SERVICES; LOSS OF USE, DATA, OR PROFITS; OR BUSINESS INTERRUPTION) HOWEVER CAUSED AND ON ANY THEORY OF LIABILITY, WHETHER IN CONTRACT, STRICT LIABILITY, OR TORT (INCLUDING NEGLIGENCE OR OTHERWISE) ARISING IN ANY WAY OUT OF THE USE OF THIS SOFTWARE, EVEN IF ADVISED OF THE POSSIBILITY OF SUCH DAMAGE.

产品中有害物质的名称及含量

部件名称	有害物质					
	铅 （Pb）	汞 （Hg）	镉 （Cd）	六价铬 （Cr(VI)）	多溴联苯 （PBB）	多溴二苯醚 （PBDE）
外壳、 框架	×	○	○	○	○	○
印刷线路板	×	○	○	○	○	○
电缆类	×	○	○	○	○	○
扩音装置	×	○	○	○	○	○

本表格依据 SJ/T 11364 的规定编制。
○： 表示该有害物质在该部件所有均质材料中的含量均在 GB/T 26572 规定的限量要求以下。
×： 表示该有害物质至少在该部件的某一均质材料中的含量超出 GB/T 26572 规定的限量要求。

此标识适用于在中华人民共和国销售的电器电子产品。标识中间的数字为环保使用期限的年数。

保护环境

如果需要废弃设备时， 请与本地相关机构联系， 获取正确的废弃方法。请勿将设备随意丢弃或作为生活垃圾处理。

仅适用于非热带气候条件下安全使用。
ཉིན་རེའི་ཚད་ཀྱི་ཁ་ཕྱིན་ཁོ་ནས་ཡོད་པའི་ས་ཁུལ་ཁོ་ནར་ཉམས་ཆག་མེད་པར་ཐུན་མཚམས་ཀྱི ཆེ་ཚད་ལས་ཀན་ཏེ།
ھۆکومەتی ئەمریکا ڕاوێژکاری دەکات کە ئەم کارە لە شوێنە گەرمەکان نەکرێت.
غەیری ئسسسق بەلباغ هاۆا کسلماتی شارائسلدلا بەخەتەر ئشلەتکسلی بولدۇ
Dan hab yungh youq gij dienheiq diuzgen mbouj dwg diegndat haenx ancienz sawjyungh.

仅适用于海拔 2000m 以下地区安全使用。
2000m ཡར་ལས་མཐོ་བའི་རྒྱུན་ལུ་ཡིན་པས་ཁྱོད་ཀྱི ཁས་ཟིན་ཁུངས་ཀྱི ཆེ་ཚད་ལས་ཀན་ཏེ།
ھۆکومەتی ئەمریکا ڕاوێژکاری دەکات کە ئەم کارە لە بەرزایی 2000m سەر ئاستی دەریا بەرزتر نەکرێت.
دېگىز يۈزىدىن 2000 مېتىر تۆۋەن رايونلاردىلا بەخەتەر ئشلەتکسلی بولدۇ
Dan hab yungh youq gij digih haijbaz 2 000m doxroengz haenx ancienz sawjyungh.

关于产品上所示的图标，请按照相应图标的上述说明进行操作。
ཁྱད་ཆོས་ཀྱི་ཁ་ཡིག་ཁག་ལུ་ཐུག་ཁ་ཤས་ཡོད་པ། ཁྱོད་ཀྱིས་ཁ་ཡིག་ཁག་ལུ་ཐུག་ཁ་ཤས་ཡོད་ཚུལ་ལུ་ཐུག་ཁ་ཤས་ཡོད།
ھێما لە سەر ئامێرەکە ئاماژە بە یاسا و ڕێنماییەکانی سەرەوە بکە.
مەهسۇلات نۇستىدىكى سىنىبطگىنى ماس چۇشمدوزۇش بويىچە مەشغۇلات قىلىڭ.
Doiq gijdoz veh youq gwnz canjbinj haenx, cingj mwngz ciuq gijsaw sij youq gwnzdoz doiqndei le menh baezyamq baezyamq ma guh.

Information for users on collection and disposal of old equipment:

This symbol on the products, packaging, and/or accompanying documents means that used electrical and electronic products should not be mixed with general household waste. For proper treatment, recovery and recycling of old products, please take them to applicable collection points, in accordance with your national legislation.

By disposing of these products correctly, you will help to save valuable resources and prevent any potential negative effects on human health and the environment which could otherwise arise from inappropriate waste handling.

For more information about collection and recycling of old products, please contact your local municipality, your waste disposal service or the point of sale where you purchased the items.

For business users in the European Union:
If you wish to discard electrical and electronic equipment, please contact your dealer or supplier for further information.

Information on Disposal in other Countries outside the European Union:
This symbol is only valid in the European Union. If you wish to discard these items, please contact your local authorities or dealer and ask for the correct method of disposal.

(weee_eu_en_02)

Verbraucherinformation zur Sammlung und Entsorgung alter Elektrogeräte

Befindet sich dieses Symbol auf den Produkten, der Verpackung und/oder beiliegenden Unterlagen, so sollten benutzte elektrische Geräte nicht mit dem normalen Haushaltsabfall entsorgt werden.

In Übereinstimmung mit Ihren nationalen Bestimmungen bringen Sie alte Geräte bitte zur fachgerechten Entsorgung, Wiederaufbereitung und Wiederverwendung zu den entsprechenden Sammelstellen.

Durch die fachgerechte Entsorgung der Elektrogeräte helfen Sie, wertvolle Ressourcen zu schützen, und verhindern mögliche negative Auswirkungen auf die menschliche Gesundheit und die Umwelt, die andernfalls durch unsachgerechte Müllentsorgung auftreten könnten.

Für weitere Informationen zum Sammeln und Wiederaufbereiten alter Elektrogeräte kontaktieren Sie bitte Ihre örtliche Stadt- oder Gemeindeverwaltung, Ihren Abfallentsorgungsdienst oder die Verkaufsstelle der Artikel.

Information für geschäftliche Anwender in der Europäischen Union:
Wenn Sie Elektrogeräte ausrangieren möchten, kontaktieren Sie bitte Ihren Händler oder Zulieferer für weitere Informationen.

Entsorgungsinformation für Länder außerhalb der Europäischen Union:
Dieses Symbol gilt nur innerhalb der Europäischen Union. Wenn Sie solche Artikel ausrangieren möchten, kontaktieren Sie bitte Ihre örtlichen Behörden oder Ihren Händler und fragen Sie nach der sachgerechten Entsorgungsmethode.

(weee_eu_de_02)

Informations concernant la collecte et le traitement des déchets d'équipements électriques et électroniques

Le symbole sur les produits, l'emballage et/ou les documents joints signifie que les produits électriques ou électroniques usagés ne doivent pas être mélangés avec les déchets domestiques habituels.

Pour un traitement, une récupération et un recyclage appropriés des déchets d'équipements électriques et électroniques, veuillez les déposer aux points de collecte prévus à cet effet, conformément à la réglementation nationale.

En vous débarrassant correctement des déchets d'équipements électriques et électroniques, vous contribuerez à la sauvegarde de précieuses ressources et à la prévention de potentiels effets négatifs sur la santé humaine qui pourraient advenir lors d'un traitement inapproprié des déchets.

Pour plus d'informations à propos de la collecte et du recyclage des déchets d'équipements électriques et électroniques, veuillez contacter votre municipalité, votre service de traitement des déchets ou le point de vente où vous avez acheté les produits.

Pour les professionnels dans l'Union européenne :
Si vous souhaitez vous débarrasser des déchets d'équipements électriques et électroniques, veuillez contacter votre vendeur ou fournisseur pour plus d'informations.

Informations sur la mise au rebut dans d'autres pays en dehors de l'Union européenne:
Ce symbole est seulement valable dans l'Union européenne. Si vous souhaitez vous débarrasser de déchets d'équipements électriques et électroniques, veuillez contacter les autorités locales ou votre fournisseur et demander la méthode de traitement appropriée.

(weee_eu_fr_02)

Información para usuarios sobre la recogida y eliminación de los equipos antiguos

Este símbolo en los productos, embalajes y documentos anexos significa que los productos eléctricos y electrónicos no deben mezclarse con los desperdicios domésticos normales.

Para el tratamiento, recuperación y reciclaje apropiados de los productos antiguos, llévelos a puntos de reciclaje correspondientes, de acuerdo con la legislación nacional.

Al deshacerse de estos productos de forma correcta, ayudará a ahorrar recursos valiosos y a impedir los posibles efectos desfavorables en la salud humana y en el entorno que de otro modo se producirían si se trataran los desperdicios de modo inapropiado.

Para obtener más información acerca de la recogida y el reciclaje de los productos antiguos, póngase en contacto con las autoridades locales, con el servicio de eliminación de basuras o con el punto de venta donde adquirió los artículos.

Para los usuarios empresariales de la Unión Europea:
Si desea desechar equipos eléctricos y electrónicos, póngase en contacto con su vendedor o proveedor para obtener más información.

Información sobre la eliminación en otros países fuera de la Unión Europea:
Este símbolo solo es válido en la Unión Europea. Si desea desechar estos artículos, póngase en contacto con las autoridades locales o con el vendedor y pregúnteles el método correcto.

(weee_eu_es_02)

Informazioni per gli utenti sulla raccolta e lo smaltimento di vecchia attrezzatura

Questi simboli sui prodotti, sull'imballaggio e/o sui documenti che li accompagnano, indicano che i prodotti elettrici ed elettronici non devono essere mischiati con i rifiuti generici.

Per il trattamento, il recupero e il riciclaggio appropriato di vecchi prodotti, si prega di portarli ai punti di raccolta designati, in accordo con la legislazione locale.

Smaltendo correttamente questi prodotti si potranno recuperare risorse preziose, oltre a prevenire potenziali effetti negativi sulla salute e l'ambiente che potrebbero sorgere a causa del trattamento improprio dei rifiuti.

Per ulteriori informazioni sulla raccolta e il riciclaggio di vecchi prodotti, si prega di contattare l'amministrazione comunale locale, il servizio di smaltimento dei rifiuti o il punto vendita dove sono stati acquistati gli articoli.

Per utenti imprenditori dell'Unione europea:
Se si desidera scartare attrezzatura elettrica ed elettronica, si prega di contattare il proprio rivenditore o il proprio fornitore per ulteriori informazioni.

Informazioni sullo smaltimento negli altri Paesi al di fuori dell'Unione europea:
Questi simboli sono validi solamente nell'Unione Europea; se si desidera scartare questi articoli, si prega di contattare le autorità locali o il rivenditore e richiedere informazioni sulla corretta modalità di smaltimento.

(weee_eu_it_02)

Informações para os utilizadores relativas à recolha e eliminação de equipamentos usados

Este símbolo, presente em produtos, embalagens e/ou incluído na documentação associada, indica que os produtos elétricos e eletrónicos usados não devem ser eliminados juntamente com os resíduos domésticos em geral.

O procedimento correto consiste no tratamento, recuperação e reciclagem de produtos usados, pelo que deve proceder à respetiva entrega nos pontos de recolha adequados, em conformidade com a legislação nacional em vigor.

A eliminação destes produtos de forma adequada permite poupar recursos valiosos e evitar potenciais efeitos prejudiciais para a saúde pública e para o ambiente, associados ao processamento incorreto dos resíduos.

Para mais informações relativas à recolha e reciclagem de produtos usados, contacte as autoridades locais, o serviço de eliminação de resíduos ou o ponto de venda onde foram adquiridos os itens relevantes.

Informações para utilizadores empresariais na União Europeia:
Para proceder à eliminação de equipamento elétrico e eletrónico, contacte o seu revendedor ou fornecedor para obter informações adicionais.

Informações relativas à eliminação em países não pertencentes à União Europeia:
Este símbolo é válido exclusivamente na União Europeia. Caso pretenda eliminar este tipo de itens, contacte as autoridades locais ou o seu revendedor e informe-se acerca do procedimento correto para proceder à respetiva eliminação.

(weee_eu_pt_02a)

Важное примечание: Информация об условиях Гарантии для Клиентов в Российской Федерации [Русский]
Для получения подробной информации об условиях Гарантии на продукцию Yamaha в России, условиях гарантийного обслуживан я, пожалуйста, посетите веб-сайт по адресу ниже (на сайте доступен файл с условиями для скачивания и печати) или обратитесь в офис представительства Yamaha в России.

http://ru.yamaha.com/ru/support/

Продукция	Акустическая система VXL1B-16P, VXL1W-16P
Страна происхождения	Индонезия
Изготовитель	YAMAHA CORPORATION 10-1 Nakazawa-cho, Naka-ku, Hamamatsu-shi, Shizuoka-ken 430-8650, Япония.
Номинальное напряжение	48 В постоянного тока (48V DC)
Потребляемая мощность	6 Вт
Дата изготовления	Дата изготовления обозначена в серийном номере, указанном на нижней или задней стороне инструмента. Ser No. XXXAB00000 Год изготовления — Месяц изготовления Год изготовления обозначен первой из двух букв, предшествующих пяти последним цифрам. 2013 год обозначен буквой «T», а следующие за ним годы обозначены следующими за «T» буквами английского алфавита. Месяц изготовления обозначен второй буквой, предшествующей пяти последним цифрам. Месяцы с января по сентябрь обозначены буквами с «H» до «P», а месяцы с октября по декабрь обозначены буквами от «X» до «Z».
Соответствует требованиям	ТР ТС 004/2011 ТР ТС 020/2011
Срок хранения	Срок хранения не установлен.
Условия для утилизации продуктов	Следуйте местному органу правил утилизации отходов.
Условия для реализации продуктов	Правила и условия реализации не установлены изготовителем и должны соответствовать национальному и/или местному законодательству страны реализации товара.
Название и адрес импортера на территории таможенного союза	ООО “Ямаха Мюзик” г.Москва, улица Киевская, дом 7, офис 37
Условие хранения	Во избежание деформации и, повреждения внутренних компонентов и сбоев в работе не держите оборудовани в помещениях с избыточной вибрацией, а также в местах, где слишком пыльно, холодно или жарко.

Important Notice: Guarantee Information for customers in European Economic Area (EEA) and Switzerland

English

Important Notice: Guarantee Information for customers in EEA* and Switzerland

For detailed guarantee information about this Yamaha product, and Pan-EEA* and Switzerland warranty service, please either visit the website address below (Printable file is available at our website) or contact the Yamaha representative office for your country. * EEA: European Economic Area

Deutsch

Wichtiger Hinweis: Garantie-Information für Kunden in der EWR* und der Schweiz

Für nähere Garantie-Information über dieses Produkt von Yamaha, sowie über den Pan-EWR*- und Schweizer Garantieservice, besuchen Sie bitte entweder die folgend angegebene Internetadresse (eine druckfähige Version befindet sich auch auf unserer Webseite), oder wenden Sie sich an den für Ihr Land zuständigen Yamaha-Vertrieb. *EWR: Europäischer Wirtschaftsraum

Français

Remarque importante: informations de garantie pour les clients de l'EEE et la Suisse

Pour des informations plus détaillées sur la garantie de ce produit Yamaha et sur le service de garantie applicable dans l'ensemble de l'EEE ainsi qu'en Suisse, consultez notre site Web à l'adresse ci-dessous (le fichier imprimable est disponible sur notre site Web) ou contactez directement Yamaha dans votre pays de résidence. * EEE : Espace Economique Européen

Nederlands

Belangrijke mededeling: Garantie-informatie voor klanten in de EER* en Zwitserland

Voor gedetailleerde garantie-informatie over dit Yamaha-product en de garantieservice in heel de EER* en Zwitserland, gaat u naar de ondersteunde website (u vind een afdrukbaar bestand op onze website) of neemt u contact op met de vertegenwoordiging van Yamaha in uw land. * EER: Europese Economische Ruimte

Español

Aviso importante: información sobre la garantía para los clientes del EEE* y Suiza

Para una información detallada sobre este producto Yamaha y sobre el soporte de garantía en la zona EEE* y Suiza, visite la dirección web que se incluye más abajo (la version del archivo para imprimir esta disponible en nuestro sitio web) o póngase en contacto con el representante de Yamaha en su país. * EEE: Espacio Económico Europeo

Italiano

Avviso importante: informazioni sulla garanzia per i clienti residenti nell'EEA* e in Svizzera

Per informazioni dettagliate sulla garanzia relativa a questo prodotto Yamaha e l'assistenza in garanzia nei paesi EEA* e in Svizzera, potete consultare il sito Web all'indirizzo riportato di seguito (è disponibile il file in formato stampabile) oppure contattare l'ufficio di rappresentanza locale della Yamaha. * EEA: Area Economica Europea

Português

Aviso importante: informações sobre as garantias para clientes da AEE* e da Suíça

Para obter uma informação pormenorizada sobre este produto da Yamaha e sobre o serviço de garantia na AEE* e na Suíça, visite o site a seguir (o arquivo para impressão está disponível no nosso site) ou entre em contato com o escritório de representação da Yamaha no seu país. * AEE: Área Econômica Européia

Ελληνικά

Σημαντική σημείωση: Πληροφορίες εγγύησης για τους πελάτες στον ΕΟΧ* και Ελβετία

Για λεπτομερείς πληροφορίες εγγύησης σχετικά με το παρόν προϊόν της Yamaha και την κάλυψη εγγύησης σε όλες τις χώρες του ΕΟΧ και την Ελβετία, επισκεφτείτε την παρακάτω ιστοσελίδα (Εκτυπώσιμη μορφή είναι διαθέσιμη στην ιστοσελίδα μας) ή απευθυνθείτε στην αντιπροσωπεία της Yamaha στη χώρα σας. * ΕΟΧ: Ευρωπαϊκός Οικονομικός Χώρος

Svenska

Viktigt: Garantiinformation för kunder i EES-området* och Schweiz

För detaljerad information om denna Yamahaprodukt samt garantiservice i hela EES-området* och Schweiz kan du antingen besöka nedanstående webbaddress (en utskriftsvänlig fil finns på webbplatsen) eller kontakta Yamahas officiella representant i ditt land. * EES: Europeiska Ekonomiska Samarbetsområdet

Norsk

Viktig merknad: Garantiinformasjon for kunder i EØS* og Sveits

Detaljert garantiinformasjon om dette Yamaha-produktet og garantiservice for hele EØS-området* og Sveits kan fås enten ved å besøke nettadressen nedenfor (utskriftsversjon finnes på våre nettsider) eller kontakte kontakte Yamaha-kontoret i landet der du bor. *EØS: Det europeiske økonomiske samarbeidsområdet

Dansk

Vigtig oplysning: Garantioplysninger til kunder i EØO* og Schweiz

De kan finde detaljerede garantioplysninger om dette Yamaha-produkt og den fælles garantiserviceordning for EØO* (og Schweiz) ved at besøge det websted, der er angivet nedenfor (der findes en fil, som kan udskrives, på vores websted), eller ved at kontakte Yamahas nationale repræsentationskontor i det land, hvor De bor. * EØO: Det Europæiske Økonomiske Område

Suomi

Tärkeä ilmoitus: Takuutiedot Euroopan talousalueen (ETA)* ja Sveitsin asiakkaille

Tämän Yamaha-tuotteen sekä ETA-alueen ja Sveitsin takuuta koskevat yksityiskohtaiset tiedot saatte alla olevasta nettiosoitteesta. (Tulostettava tiedosto saatavissa sivustollamme.) Voitte myös ottaa yhteyttä paikalliseen Yamaha-edustajaan. *ETA: Euroopan talousalue

Polski

Ważne: Warunki gwarancyjne obowiązujące w EOG* i Szwajcarii

Aby dowiedzieć się więcej na temat warunków gwarancyjnych tego produktu firmy Yamaha i serwisu gwarancyjnego w całym EOG* i Szwajcarii, należy odwiedzić wskazaną poniżej stronę internetową (Plik gotowy do wydruku znajduje się na naszej stronie internetowej) lub skontaktować się z przedstawicielstwem firmy Yamaha w swoim kraju. * EOG — Europejski Obszar Gospodarczy

Česky

Důležité oznámení: Záruční informace pro zákazníky v EHS* a ve Švýcarsku

Podrobné záruční informace o tomto produktu Yamaha a záručním servisu v celém EHS* a ve Švýcarsku naleznete na níže uvedené webové adrese (soubor k tisku je dostupný na našich webových stránkách) nebo se můžete obrátit na zastoupení firmy Yamaha ve své zemi. * EHS: Evropský hospodářský prostor

Magyar

Fontos figyelmeztetés: Garancia-információk az EGT* területén és Svájcban élő vásárlók számára

A jelen Yamaha termékre vonatkozó részletes garancia-információk, valamint az EGT*-re és Svájcra kiterjedő garanciális szolgáltatás tekintetében keresse fel webhelyünket az alábbi címen (a webhelyen nyomtatható fájlt is talál), vagy pedig lépjen kapcsolatba az országában működő Yamaha képviseleti irodával. * EGT: Európai Gazdasági Térség

Eesti keel

Oluline märkus: Garantiiteave Euroopa Majanduspiirkonna (EMP)* ja Šveitsi klientidele

Täpsema teabe saamiseks selle Yamaha toote garantii ning kogu Euroopa Majanduspiirkonna ja Šveitsi garantiiteeninduse kohta, külastage palun veebisaiti alljärgneval aadressil (meie saidil on saadaval prinditav fail) või pöörduge Teie regiooni Yamaha esinduse poole. * EMP: Euroopa Majanduspiirkond

Latviešu

Svarīgs paziņojums: garantijas informācija klientiem EEZ* un Šveicē

Lai saņemtu detalizētu garantijas informāciju par šo Yamaha produktu, kā arī garantijas apkalpošanu EEZ* un Šveicē, lūdzu, apmeklējiet zemāk norādīto tīmekļa vietnes adresi (tīmekļa vietnē ir pieejams drukājams fails) vai sazinieties ar jūsu valsti apkalpojošo Yamaha pārstāvniecību. * EEZ: Eiropas Ekonomikas zona

Lietuvių kalba

Dėmesio: informacija dėl garantijos pirkėjams EEE* ir Šveicarijoje

Jei reikia išsamios informacijos apie šį „Yamaha" produktą ir jo techninę priežiūrą visoje EEE* ir Šveicarijoje, apsilankykite mūsų svetainėje toliau nurodytu adresu (svetainėje yra spausdintinas failas) arba kreipkitės į „Yamaha" atstovybę savo šaliai. *EEE – Europos ekonominė erdvė

Slovenčina

Dôležité upozornenie: Informácie o záruke pre zákazníkov v EHP* a Švajčiarsku

Podrobné informácie o záruke týkajúce sa tohto produktu od spoločnosti Yamaha a garančnom servise v EHP* a Švajčiarsku nájdete na webovej stránke uvedenej nižšie (na našej webovej stránke je k dispozícii súbor na tlač) alebo sa obráťte na zástupcu spoločnosti Yamaha vo svojej krajine. * EHP: Európsky hospodársky priestor

Slovenščina

Pomembno obvestilo: Informacije o garanciji za kupce v EGP* in Švici

Za podrobnejše informacije o tem Yamahinem izdelku ter garancijskem servisu v celotnem EGP in Švici, obiščite spletno mesto, ki je navedeno spodaj (natisljiva datoteka je na voljo na našem spletnem mestu), ali se obrnite na Yamahinega predstavnika v svoji državi. * EGP: Evropski gospodarski prostor

Български език

Важно съобщение: Информация за гаранцията за клиенти в ЕИП* и Швейцария

За подробна информация за гаранцията за този продукт на Yamaha и гаранционното обслужване в паневропейската зона на ЕИП* и Швейцария или посетете посочения по-долу уеб сайт (на нашия уеб сайт има файл за печат), или се свържете с представителния офис на Yamaha във вашата страна. * ЕИП: Европейско икономическо пространство

Limba română

Notificare importantă: Informații despre garanție pentru clienții din SEE* și Elveția

Pentru informații detaliate privind acest produs Yamaha și serviciul de garanție Pan-SEE* și Elveția, vizitați site-ul la adresa de mai jos (fișierul imprimabil este disponibil pe site-ul nostru) sau contactați biroul reprezentanței Yamaha din țara dumneavoastră. * SEE: Spațiul Economic European

http://europe.yamaha.com/warranty/

URL_4

ADDRESS LIST

NORTH AMERICA

CANADA
Yamaha Canada Music Ltd.
135 Milner Avenue, Toronto, Ontario, M1S 3R1, Canada
Tel: +1-416-298-1311

U.S.A.
Yamaha Corporation of America
6600 Orangethorpe Avenue, Buena Park, CA 90620, U.S.A.
Tel: +1-714-522-9011

CENTRAL & SOUTH AMERICA

MEXICO
Yamaha de México, S.A. de C.V.
Av. Insurgentes Sur 1647 Piso 9, Col. San José Insurgentes, Delegación Benito Juárez, México, D.F., C.P. 03900, México
Tel: +52-55-5804-0600

BRAZIL
Yamaha Musical do Brasil Ltda.
Rua Fidêncio Ramos, 302 – Cj 52 e 54 – Torre B – Vila Olimpia – CEP 04551-010 – São Paulo/SP, Brazil
Tel: +55-11-3704-1377

ARGENTINA
Yamaha Music Latin America, S.A., Sucursal Argentina
Olga Cossettini 1553, Piso 4 Norte, Madero Este-C1107CEK, Buenos Aires, Argentina
Tel: +54-11-4119-7000

PANAMA AND OTHER LATIN AMERICAN COUNTRIES/CARIBBEAN COUNTRIES
Yamaha Music Latin America, S.A.
Edif. Torre Banco General, Piso 7, Urbanización Marbella, Calle 47 y Aquilino de la Guardia, Ciudad de Panamá, República de Panamá
Tel: +507-269-5311

EUROPE

THE UNITED KINGDOM/IRELAND
Yamaha Music Europe GmbH (UK)
Sherbourne Drive, Tilbrook, Milton Keynes, MK7 8BL, U.K.
Tel: +44-1908-366700

GERMANY
Yamaha Music Europe GmbH
Siemensstrasse 22-34, 25462 Rellingen, Germany
Tel: +49-4101-303-0

SWITZERLAND/LIECHTENSTEIN
Yamaha Music Europe GmbH, Branch Switzerland in Thalwil
Seestrasse 18a, 8800 Thalwil, Switzerland
Tel: +41-44-3878080

AUSTRIA/BULGARIA/CZECH REPUBLIC/HUNGARY/ROMANIA/ SLOVAKIA/SLOVENIA
Yamaha Music Europe GmbH Branch Austria
Schleiergasse 20, 1100 Wien, Austria
Tel: +43-1-60203900

POLAND
Yamaha Music Europe GmbH Sp.z o.o. Oddział w Polsce
ul. Wielicka 52, 02-657 Warszawa, Poland
Tel: +48-22-880-08-88

MALTA
Olimpus Music Ltd.
Valletta Road, Mosta MST9010, Malta
Tel: +356-2133-2093

NETHERLANDS/BELGIUM/LUXEMBOURG
Yamaha Music Europe Branch Benelux
Clarissenhof 5b, 4133 AB Vianen, The Netherlands
Tel: +31-347-358040

FRANCE
Yamaha Music Europe
7 rue Ambroise Croizat, Zone d'activités de Pariest, 77183 Croissy-Beaubourg, France
Tel: +33-1-6461-4000

ITALY
Yamaha Music Europe GmbH, Branch Italy
Via Tinelli N.67/69 20855 Gerno di Lesmo (MB), Italy
Tel: +39-039-9065-1

SPAIN/PORTUGAL
Yamaha Music Europe GmbH Ibérica, Sucursal en España
Ctra. de la Coruña km. 17,200, 28231 Las Rozas de Madrid, Spain
Tel: +34-91-639-88-88

GREECE
Philippos Nakas S.A. The Music House
19th klm. Leof. Lavriou 190 02 Peania – Attiki, Greece
Tel: +30-210-6686168

SWEDEN/FINLAND/ICELAND
Yamaha Music Europe GmbH Germany filial Scandinavia
JA Wettergrensgata 1, 400 43 Göteborg, Sweden
Tel: +46-31-89-34-00

DENMARK
Yamaha Music Denmark, Fillial of Yamaha Music Europe GmbH, Tyskland
Generatorvej 8C, ST. TH. , 2860 Søborg, Denmark
Tel: +45-44-92-49-00

NORWAY
Yamaha Music Europe GmbH Germany - Norwegian Branch
Grini Næringspark 1, 1332 Østerås, Norway
Tel: +47-6716-7800

CYPRUS
Yamaha Music Europe GmbH
Siemensstrasse 22-34, 25462 Rellingen, Germany
Tel: +49-4101-303-0

RUSSIA
Yamaha Music (Russia) LLC.
Room 37, entrance 7, bld. 7, Kievskaya street, Moscow, 121059, Russia
Tel: +7-495-626-5005

OTHER EUROPEAN COUNTRIES
Yamaha Music Europe GmbH
Siemensstrasse 22-34, 25462 Rellingen, Germany
Tel: +49-4101-3030

AFRICA

Yamaha Music Gulf FZE
JAFZA-16, Office 512, P.O.Box 17328, Jebel Ali FZE, Dubai, UAE
Tel: +971-4-801-1500

MIDDLE EAST

TURKEY
Yamaha Music Europe GmbH Merkezi Almanya Türkiye İstanbul Şubesi
Mor Sumbul Sokak Varyap Meridian Business 1.Blok No:1 113-114-115
Bati Atasehir Istanbul, Turkey
Tel: +90-216-275-7960

OTHER COUNTRIES
Yamaha Music Gulf FZE
JAFZA-16, Office 512, P.O.Box 17328, Jebel Ali FZE, Dubai, UAE
Tel: +971-4-801-1500

ASIA

THE PEOPLE'S REPUBLIC OF CHINA
Yamaha Music & Electronics (China) Co.,Ltd.
2F, Yunhedasha, 1818 Xinzha-lu, Jingan-qu, Shanghai, China
Tel: +86-400-051-7700

INDIA
Yamaha Music India Private Limited
P-401, JMD Megapolis, Sector-48, Sohna Road, Gurgaon-122018, Haryana, India
Tel: +91-124-485-3300

INDONESIA
PT. Yamaha Musik Indonesia (Distributor)
Yamaha Music Center Bldg. Jalan Jend. Gatot Subroto Kav. 4, Jakarta 12930, Indonesia
Tel: +62-21-520-2577

KOREA
Yamaha Music Korea Ltd.
11F, Prudential Tower, 298, Gangnam-daero, Gangnam-gu, Seoul, 06253, Korea
Tel: +82-2-3467-3300

MALAYSIA
Yamaha Music (Malaysia) Sdn. Bhd.
No.8, Jalan Perbandaran, Kelana Jaya, 47301 Petaling Jaya, Selangor, Malaysia
Tel: +60-3-78030900

SINGAPORE
Yamaha Music (Asia) Private Limited
Block 202 Hougang Street 21, #02-00, Singapore 530202, Singapore
Tel: +65-6740-9200

TAIWAN
Yamaha Music & Electronics Taiwan Co.,Ltd.
2F., No.1, Yuandong Rd., Banqiao Dist., New Taipei City 22063, Taiwan (R.O.C.)
Tel: +886-2-7741-8888

THAILAND
Siam Music Yamaha Co., Ltd.
3, 4, 15, 16th Fl., Siam Motors Building, 891/1 Rama 1 Road, Wangmai, Pathumwan, Bangkok 10330, Thailand
Tel: +66-2215-2622

VIETNAM
Yamaha Music Vietnam Company Limited
15th Floor, Nam A Bank Tower, 201-203 Cach Mang Thang Tam St., Ward 4, Dist.3, Ho Chi Minh City, Vietnam
Tel: +84-8-3818-1122

OTHER ASIAN COUNTRIES
http://asia.yamaha.com/

OCEANIA

AUSTRALIA
Yamaha Music Australia Pty. Ltd.
Level 1, 80 Market Street, South Melbourne, VIC 3205, Australia
Tel: +61-3-9693-5111

COUNTRIES AND TRUST TERRITORIES IN PACIFIC OCEAN
http://asia.yamaha.com/

Head Office/Manufacturer: Yamaha Corporation 10-1, Nakazawa-cho, Naka-ku, Hamamatsu, 430-8650, Japan
(For European Countries) Importer: Yamaha Music Europe GmbH Siemensstrasse 22-34, 25462 Rellingen, Germany

雅马哈乐器音响（中国）投资有限公司
上海市静安区新闸路1818号云和大厦2楼
客户服务热线 ： 4000517700
公司网址 ： http://www.yamaha.com.cn

制造商 ： 雅马哈株式会社
制造商地址 ： 日本静冈县滨松市中区中泽町10-1
进口商 ： 雅马哈乐器音响（中国）投资有限公司
进口商地址 ： 上海市静安区新闸路1818号云和大厦2楼
原产地 ： 印度尼西亚

Yamaha Pro Audio global website
https://www.yamaha.com/proaudio/

Yamaha Downloads
https://download.yamaha.com/

Manual Development Group
© 2018 Yamaha Corporation

Published 08/2018 发行 IPEI-A1

VAC9950